MKX² & HX² 10 Series

Swing-Away Grain Auger Assembly Manual

This manual applies to:

AGI Westfield MKX² 10 (53/63/73/83)

AGI Hutchinson HX² 10 (53)

AGI Mayrath HX² 10 (53)

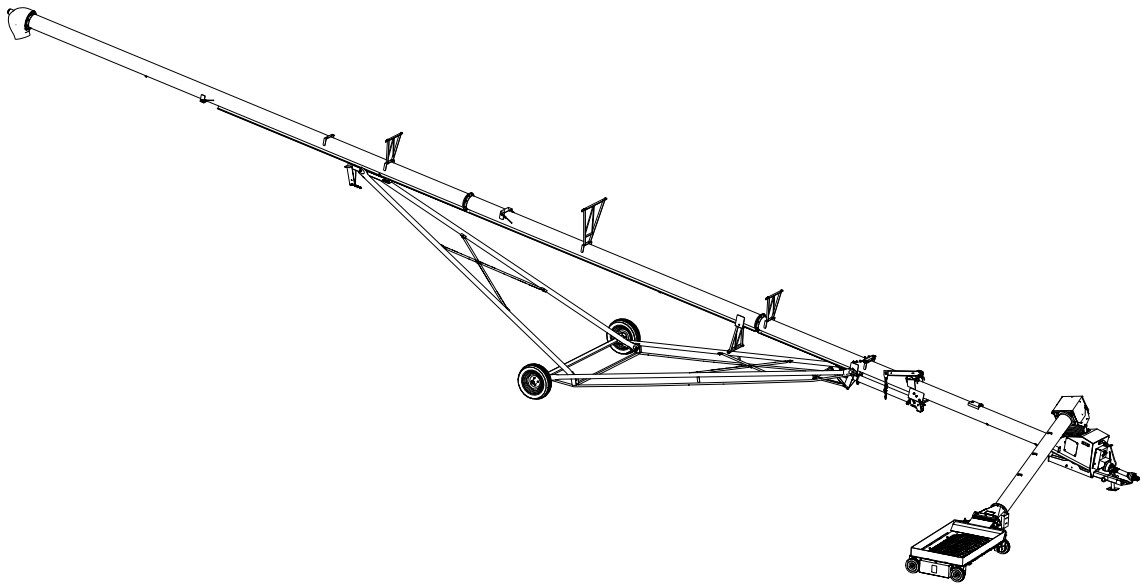

LOOKING FOR PARTS?

Check out our online Parts Catalog!

Read this manual before using product. Failure to follow instructions and safety precautions can result in serious injury, death, or property damage. Keep manual for future reference.

Part Number: 31183 R4

Revised: April 2025

Original Instructions

New in this Manual

The following changes have been made in this revision of the manual:

Description	Section
Updated the stabilizer bracket hardware (83 model).	Section 4.15 – Connect the Auger Tube to the Frame on page 47

CONTENTS

1. Introduction

Before assembling, please read this manual. Familiarize yourself with the process and the necessary precautions for efficient and safe assembly of this AGI Swing-Away Grain Auger.

Everyone present at the assembly site is required to be familiar with all safety precautions.

Keep this manual available for frequent reference and review it with new personnel. Call your local distributor or dealer if you need assistance or additional information.

2. Safety

2.1. Safety Alert Symbol and Signal Words

This safety alert symbol indicates important safety messages in this manual. When you see this symbol, be alert to the possibility of injury or death, carefully read the message that follows, and inform others.

Signal Words: Note the use of the signal words **DANGER**, **WARNING**, **CAUTION**, and **NOTICE** with the safety messages. The appropriate signal word for each message has been selected using the definitions below as a guideline.

DANGER Indicates an imminently hazardous situation that, if not avoided, will result in serious injury or death.

WARNING Indicates a hazardous situation that, if not avoided, could result in serious injury or death.

CAUTION Indicates a hazardous situation that, if not avoided, may result in minor or moderate injury.

NOTICE Indicates a potentially hazardous situation that, if not avoided, may result in property damage.

2.2. General Safety Information

Read and understand all safety instructions, safety decals, and manuals and follow them when assembling the equipment.

- Only experienced personnel who are familiar with this type of assembly and installation should perform this work. Untrained assemblers/installers expose themselves and bystanders to possible serious injury or death.

- Do not modify the auger in any way or deviate from the instructions in this manual without written permission from the manufacturer. Unauthorized modification or methods may impair the function and/or safety. Any unauthorized modification will void the warranty.
- Follow a health and safety program for your worksite. Contact your local occupational health and safety organization for information.
- Contact your local representative or AGI if you need assistance or additional information.
- Always follow applicable local codes and regulations.

2.3. Rotating Flighting Safety

DANGER

- KEEP AWAY from rotating flighting.
- DO NOT remove or modify flighting guards, doors, or covers. Keep in good working order. Have replaced if damaged.
- DO NOT operate the auger without all guards, doors, and covers in place.
- NEVER touch the flighting. Use a stick or other tool to remove an obstruction or clean out.
- Shut off and lock out power to adjust, service, or clean.

2.4. Rotating Parts Safety

WARNING

- Keep body, hair, and clothing away from rotating shafts, pulleys, belts, chains, and sprockets.
- Do not operate with any guard removed or modified. Keep guards in good working order.
- Shut off and lock out power source before inspecting or servicing machine.

2.5. Hand Winch Safety

When Equipped:

WARNING

- Inspect lift cable before using. Replace if frayed or damaged. Make sure lift cable is seated properly in cable sheaves and cable clamps are secure.
- Tighten brake lock by turning winch handle clockwise at least two clicks after lowering the auger.
- Raise the swing hopper fully before towing.
- Do not lubricate winch brake discs.

2.6. Hydraulic Winch Safety

When Equipped:

WARNING

- Keep away from rotating cable drum and winch cable. Do not touch or grab cable while winch is being operated or use hands to guide the cable.
- Inspect cable and cable clamps before using hydraulic winch. Replace cable if frayed or damaged. Tighten cable clamps if necessary.
- Check the cable anchor on the winch drum is tight.
- Confirm hydraulic hoses are in good condition.
- Do not continue to supply power to hydraulic winch after the swing hopper is fully lifted.
- Do not disconnect hydraulic quick couplers when lines are pressurized.
- Make sure lift cable is seated in cable pulley.
- Always keep a minimum of 3 cable wraps on the cable drum.

2.7. Drives and Lockout Safety

Inspect the power source(s) before using and know how to shut down in an emergency. Whenever you service or adjust your equipment, make sure you shut down the power source and follow lockout and tagout procedures to prevent inadvertent start-up and hazardous energy release. Know the procedure(s) that applies to your equipment from the following power source(s). Ensure that only 1 key exists for each assigned lock, and that you are the only one that holds that key. Ensure that all personnel are clear before turning on power to equipment.

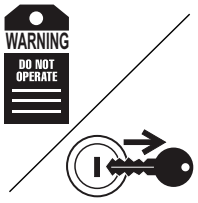

2.7.1 PTO Driveline Safety

WARNING **Drive**

- Keep body, hair, and clothing away from rotating PTO driveline.
- Make certain the driveline shields telescope and rotate freely on driveline before attaching.
- Make certain the driveline is securely attached at both ends.
- Do not operate auger unless all driveline, tractor, and equipment shields are in place and in good working order.
- Do not exceed the specified operating speed.
- Keep universal joint angles small and equal. Do not exceed maximum recommended length for PTO driveline.
- Engage tractor park brake and/or chock wheels.

Lockout

- Position all controls in neutral, shut off tractor's engine, and remove key from tractor.
- If removing key is impossible, remove PTO driveline from tractor.

2.7.2 Hydraulic Power Safety

WARNING **Power Source**

- Refer to the rules and regulations applicable to the power source operating the hydraulic system.
- Do not connect or disconnect hydraulic lines while system is under pressure.
- Keep all hydraulic lines away from moving parts and pinch points.
- Escaping hydraulic fluid under pressure will cause serious injury if it penetrates the skin surface (serious infection or toxic reaction can develop). See a doctor immediately if injured.
- Use metal or wood as a backstop when searching for hydraulic leaks and wear proper hand and eye protection.
- Check all hydraulic components are tight and in good condition. Replace any worn, cut, abraded, flattened, or crimped hoses.
- Clean the connections before connecting to equipment.
- Do not attempt any makeshift repairs to the hydraulic fittings or hoses with tape, clamps, or adhesive. The hydraulic system operates under extremely high pressure; such repairs will fail suddenly and create a hazardous and unsafe condition.

Lockout

- Always place all hydraulic controls in neutral and relieve system pressure before disconnecting or working on hydraulic system.

2.8. Tire Safety

WARNING Failure to follow proper procedures when mounting a tire on a wheel or rim can produce an explosion that may result in serious injury or death.

- DO NOT attempt to mount a tire unless you have the proper equipment and experience to do the job.
- Have a qualified tire dealer or repair service perform required tire maintenance.
- When replacing worn tires, make sure they meet the original tire specifications. Never undersize the replacement tire.
- DO NOT weld to the tire rim with the tire mounted on the rim. This action may cause an explosion which could result in serious injury or death.
- Inflate tires to the manufacturer's recommended pressure.
- Tires should not be operated at speeds higher than their rated speed.
- Keep wheel lug nuts tightened to manufacturer's recommendations.
- Never reinflate a tire that has been run flat or seriously under-inflated without removing the tire from the wheel. Have the tire and wheel closely inspected for damage before remounting.

2.9. Personal Protective Equipment

The following Personal Protective Equipment (PPE) should be worn when operating or maintaining the equipment.

Safety Glasses

- Wear safety glasses at all times to protect eyes from debris.

Coveralls

- Wear coveralls to protect skin.

Hard Hat

- Wear a hard hat to help protect your head.

Steel-Toe Boots

- Wear steel-toe boots to protect feet from falling debris.

Work Gloves

- Wear work gloves to protect your hands from sharp and rough edges.

Dust Mask

- Wear a dust mask to prevent breathing potentially harmful dust.

Hearing Protection

- Wear ear protection to prevent hearing damage.

2.10. Safety Equipment

The following safety equipment should be kept on site.

Fire Extinguisher

- Provide a fire extinguisher for use in case of an accident. Store in a highly visible and accessible place.

First-Aid Kit

- Have a properly-stocked first-aid kit available for use should the need arise, and know how to use it.

2.11. Safety Decals

- Keep safety decals clean and legible at all times.
- Replace safety decals that are missing or have become illegible. See decal location figures that follow.
- Replaced parts must display the same decal(s) as the original part.
- Replacement safety decals are available **free of charge** from your distributor, dealer, or factory as applicable.

2.11.1 Decal Installation/Replacement

1. Decal area must be clean and dry, with a temperature above 50°F (10°C).
2. Decide on the exact position before you remove the backing paper.
3. Align the decal over the specified area and carefully press the small portion with the exposed sticky backing in place.
4. Slowly peel back the remaining paper and carefully smooth the remaining portion of the decal in place.
5. Small air pockets can be pierced with a pin and smoothed out using the decal backing paper.

2.11.2 Safety Decal Locations and Details

Replicas of the safety decals that are attached to the auger and their messages are shown in the figure(s) that follow. Safe operation and use of the auger requires that you familiarize yourself with the various safety decals and the areas or particular functions that the decals apply to, as well as the safety precautions that must be taken to avoid serious injury, death, or damage.

Figure 1. Hydraulic Cylinder Safety Decals

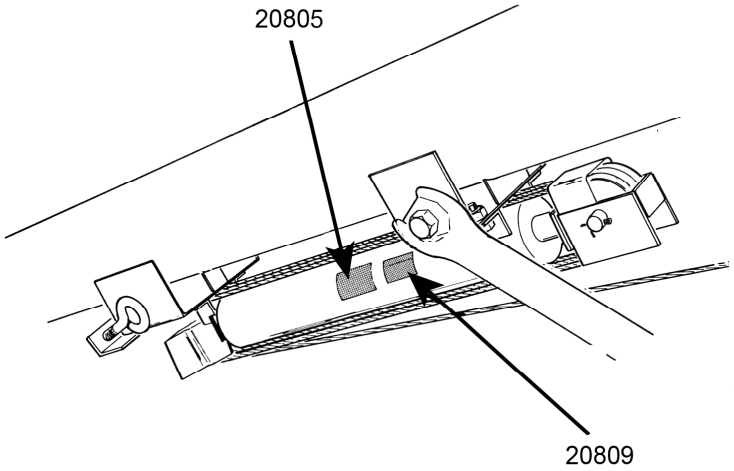

Figure 2. Tow Bar Safety Decal

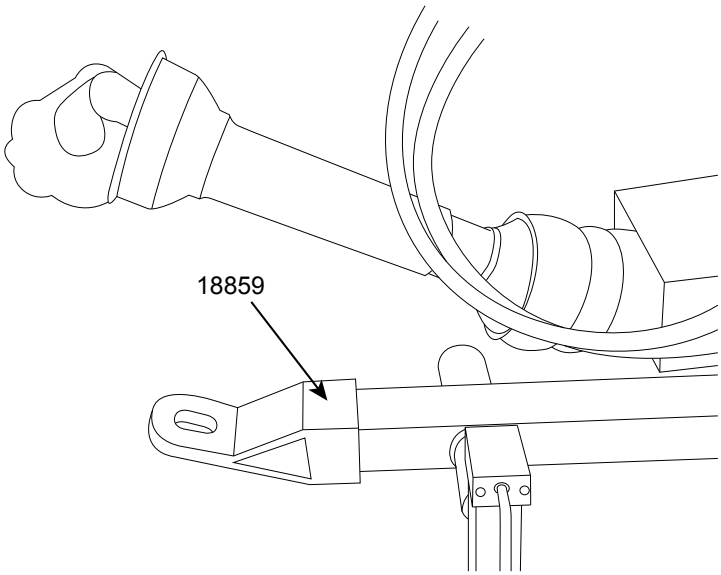

Figure 3. Auger Tube and Hopper Safety Decals

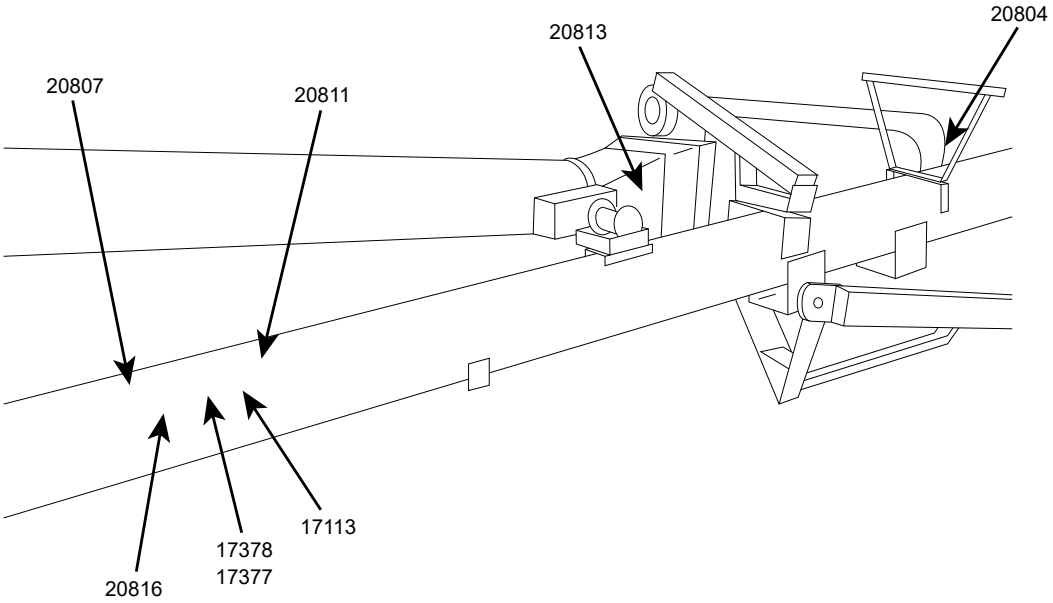

Figure 4. Boot Safety Decals

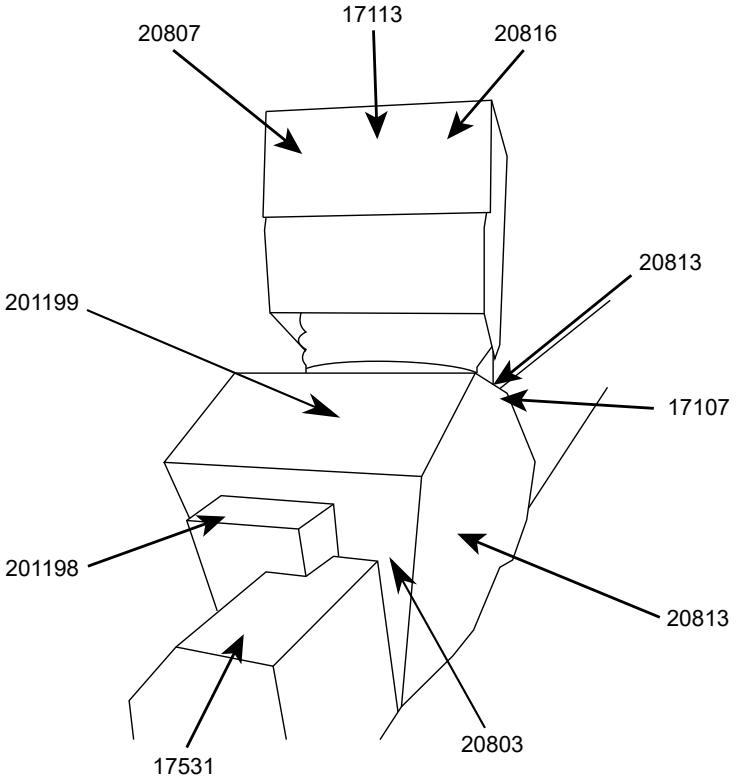

Figure 5. Roll-Over / Transport Safety Decal

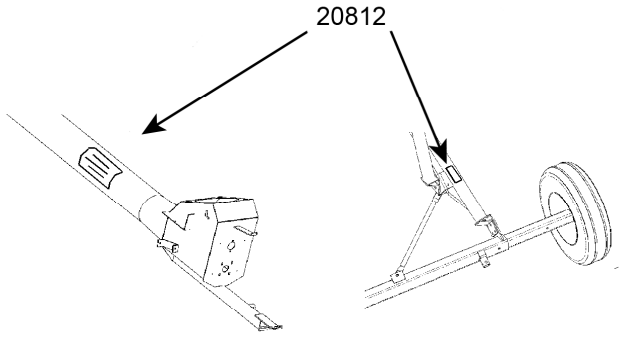

Table 1. Safety Decals

Part Number	Description
20813	

Table 1 Safety Decals (continued)

Part Number	Description
20816	
17113	

Table 1 Safety Decals (continued)

Part Number	Description
20804 (located on hopper chain guard)	

Table 1 Safety Decals (continued)

Part Number	Description
20805	
201198	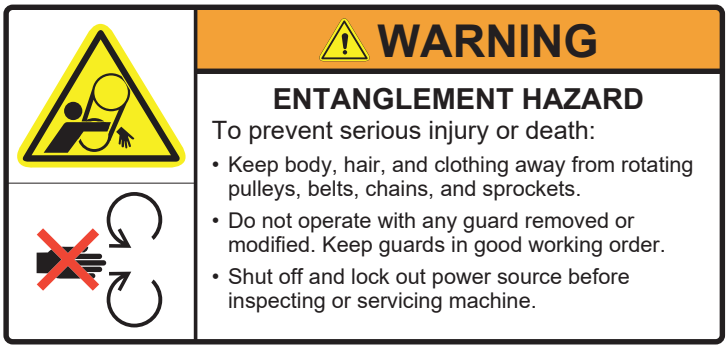
201199	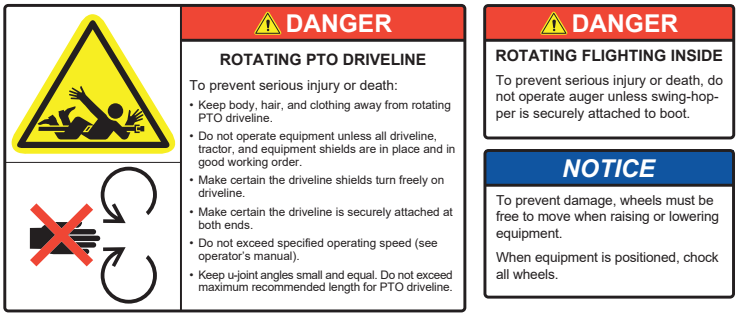

Table 1 Safety Decals (continued)

Part Number	Description
20811	

Table 1 Safety Decals (continued)

Part Number	Description
20807	**WARNING** To prevent serious injury or death: • Read and understand the manual before assembling, operating, or maintaining the equipment. • Only trained personnel may assemble, operate, or maintain the equipment. • Children and untrained personnel must be kept outside of the work area. • Do not modify the equipment. Keep in good working order. • If the manual, guards, or decals are missing or damaged, contact factory or representative for free replacements. • Lock out power before performing maintenance. • To prevent equipment collapse or upending, support equipment tube while disassembling certain components. • Follow grain storage structure manufacturer's warnings when loading and unloading. • Electric motors must be grounded. Disconnect power before resetting overloads.

Table 1 Safety Decals (continued)

Part Number	Description
20803 (placed behind guard)	
20809	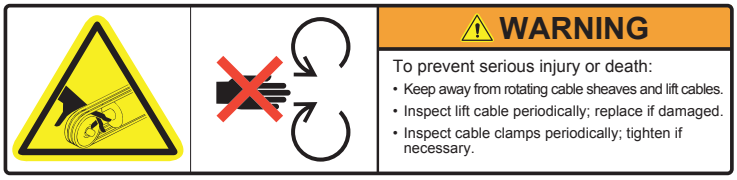
20812 (83 model)	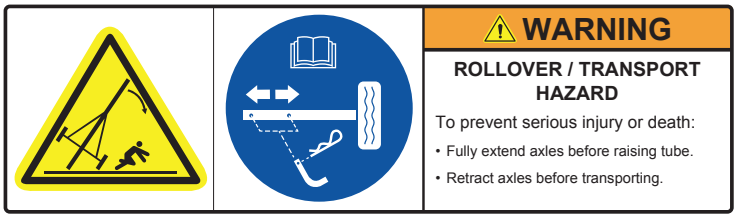
17107	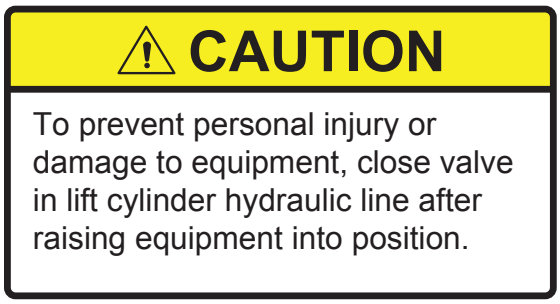

Table 1 Safety Decals (continued)

Part Number	Description
18859	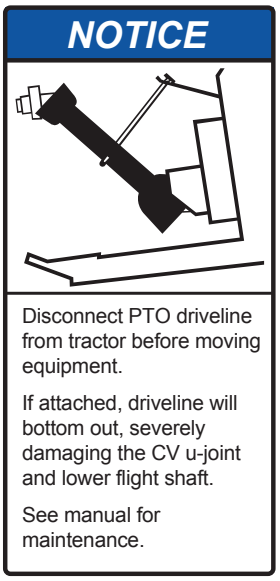
17531	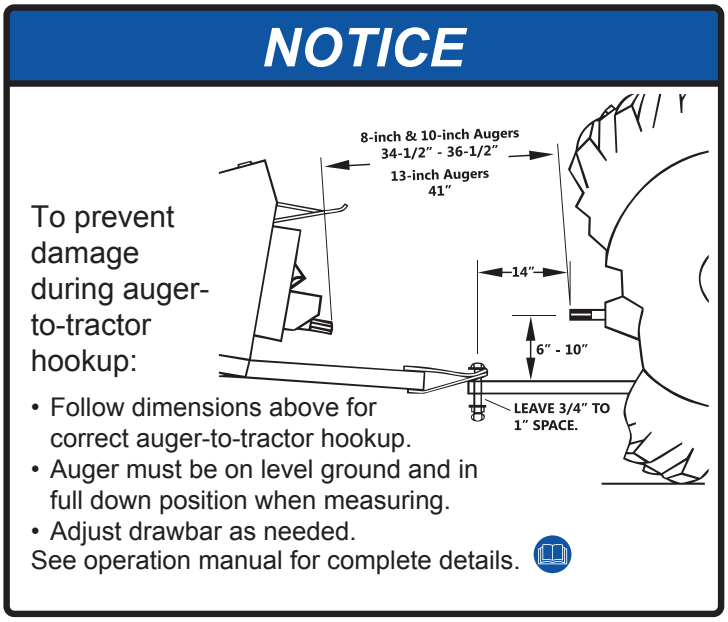

Table 1 Safety Decals (continued)

Part Number	Description
17378 (83 model)	**NOTICE** This equipment is not intended for transport on public roads. If it must be moved, check local regulations. To avoid damaging the equipment: • Be careful when turning corners. • Watch for low overhead objects. • Retract axles before transporting unit.
17377 (83 model)	**NOTICE** To lower equipment, start tractor, then engage hydraulic lever in down position. • This pumps oil to upper chamber of the hydraulic cylinders preventing overfill of tractor reservoir.

3. Features

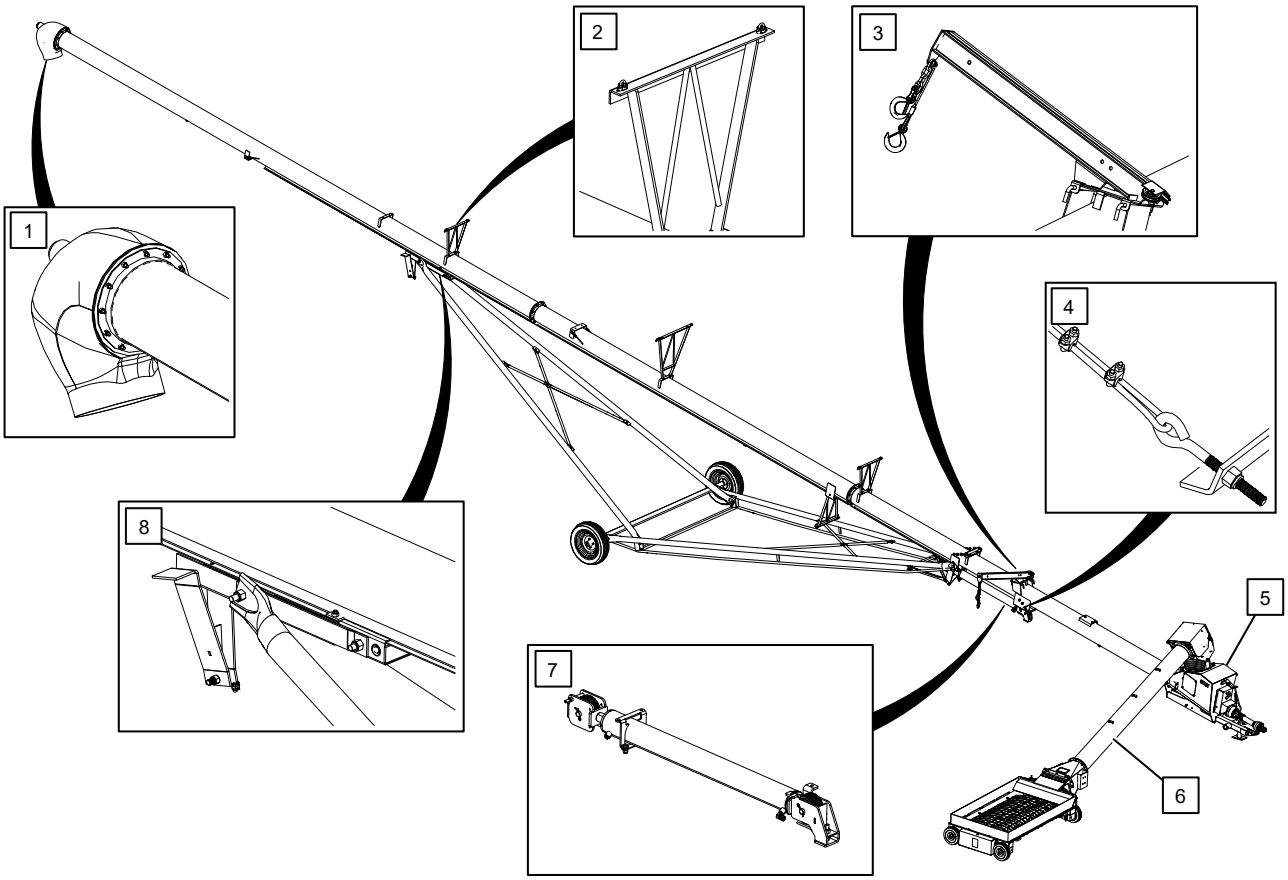

1	discharge spout	5	boot
2	truss tower	6	swing tube
3	lift arm	7	hydraulic cylinders
4	cable adjustment	8	lift-assist

Swing Features

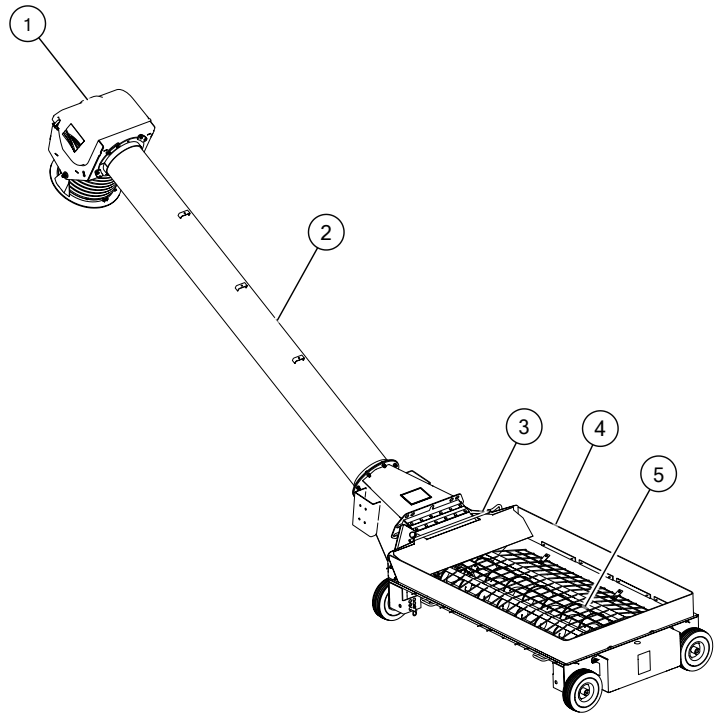

1	spout head service cover
2	swing tube
3	maintenance hatch
4	hopper
5	flights and flight guarding

Grain Transfer Boot Features

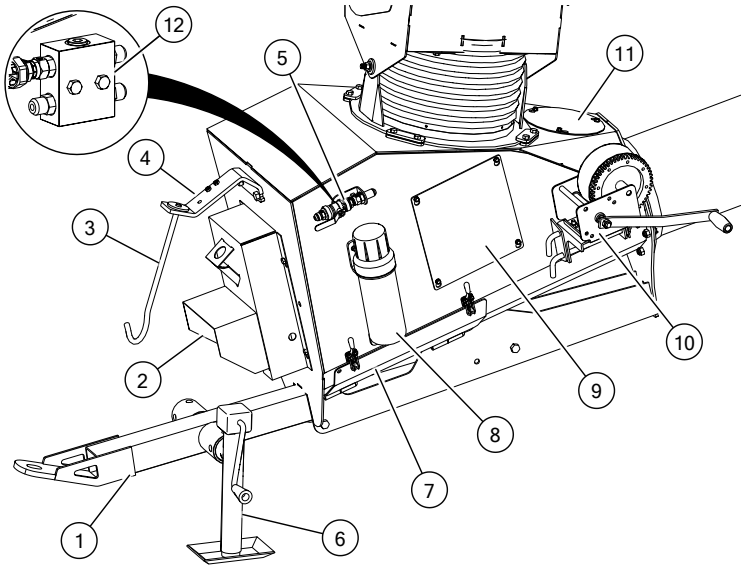

1	hitch
2	PTO sprocket cover
3	PTO transport saddle
4	transport bracket
5	ball valve
6	hitch jack
7	clean-out hatch
8	manual holder
9	side access panel
10	manual winch (hopper)
11	top access panel
12	external check valve (83 model only)

4. Assembly

4.1. Assembly Safety

WARNING

- Do not take chances with safety. The components can be large, heavy, and hard to handle. Always use the proper tools, rated lifting equipment, and lifting points for the job.
- Do not stand on, under, or near any component that is not secured.
- Carry out assembly in a large open area with a level surface.
- Always have two or more people assembling the auger.
- Make sure you have sufficient lighting for the work area.
- Tighten all fasteners according to their specifications. Do not replace or substitute bolts, nuts, or other hardware that is of lesser quality than the hardware supplied by the manufacturer.

4.2. Check the Shipment

Unload the auger parts at the assembly site and compare the packing slip to the shipment contents. Ensure that all items have arrived and that none are damaged. Take pictures of shipments prior to, or just after, unloading if there are any damages.

Report missing or damaged parts immediately to ensure that proper credit is received from AGI or your representative, and to ensure that any missing parts can be shipped quickly to avoid holding up the assembly process.

Important

Do not assemble or install damaged components.

4.3. Before You Begin

Before you assemble the auger:

- Familiarize yourself with all the sub-assemblies, components, and hardware that make up the equipment.
- Have all parts and components on hand, and arrange them for easy access.
- Separate the hardware (bolts, nuts, etc.) and lay them out into groups for easier identification during assembly.
- If assembling inside, confirm the ceiling and door width/height provide enough clearance when installing the undercarriage and to remove the auger from the building.
- Ensure there is adequate space to remove the assembled auger from the assembly area.

4.4. Tube Layout and Branding Decal Placement

Identify and Arrange the Auger Tube Sections

1. Align tube sections on a series of support stands, placing a support stand at the end of each tube (see the figures below for correct tube identification and positioning).
2. As tubes sections are added, make sure that support stands are at equal heights across all tubes to ensure that tubes are level with each other. Otherwise, use some form of shim to keep the tubes level across all of the support stands.

   Important

   Strap tubes to the support stands to prevent the tubes from rolling off the stands.

Figure 6. 53 Model Tube Sections

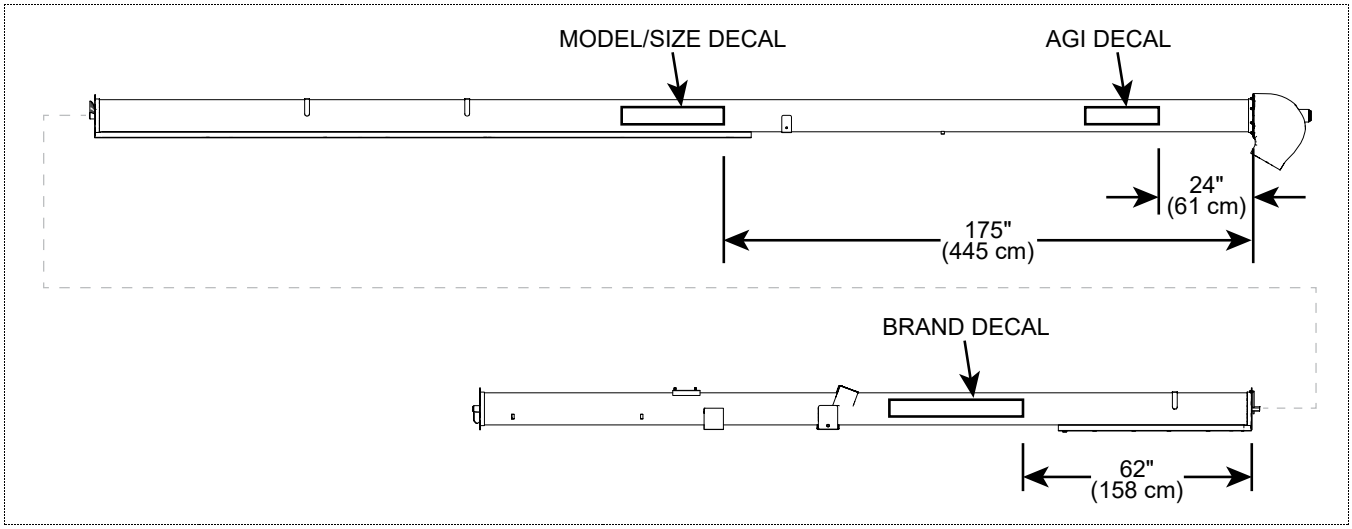

Figure 7. 63 Model Tube Sections

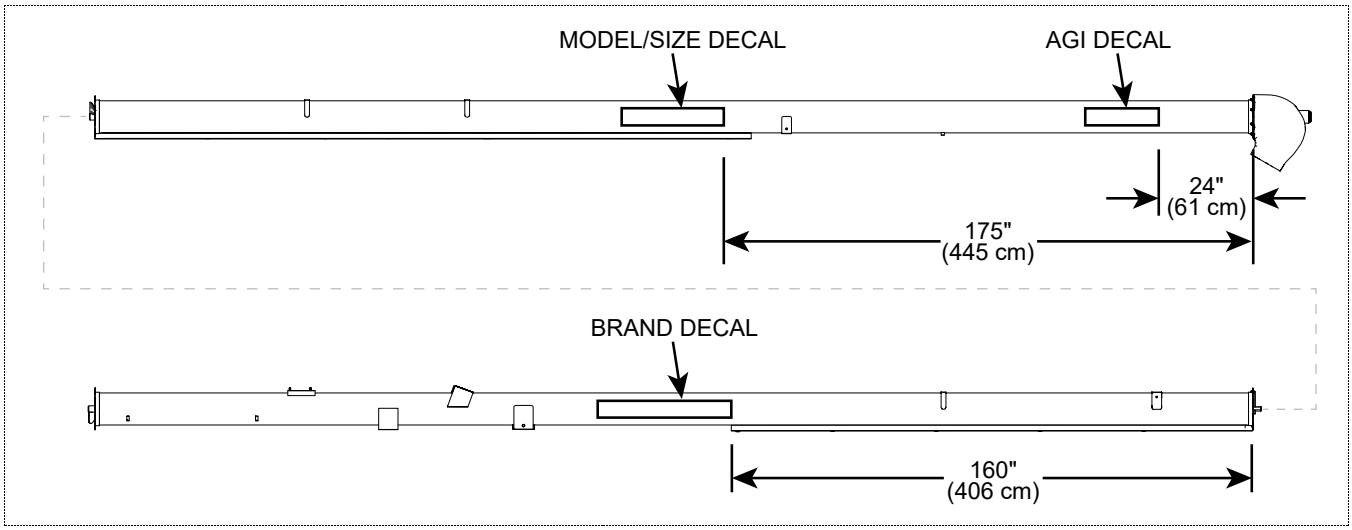

Figure 8. 73 Model Tube Sections

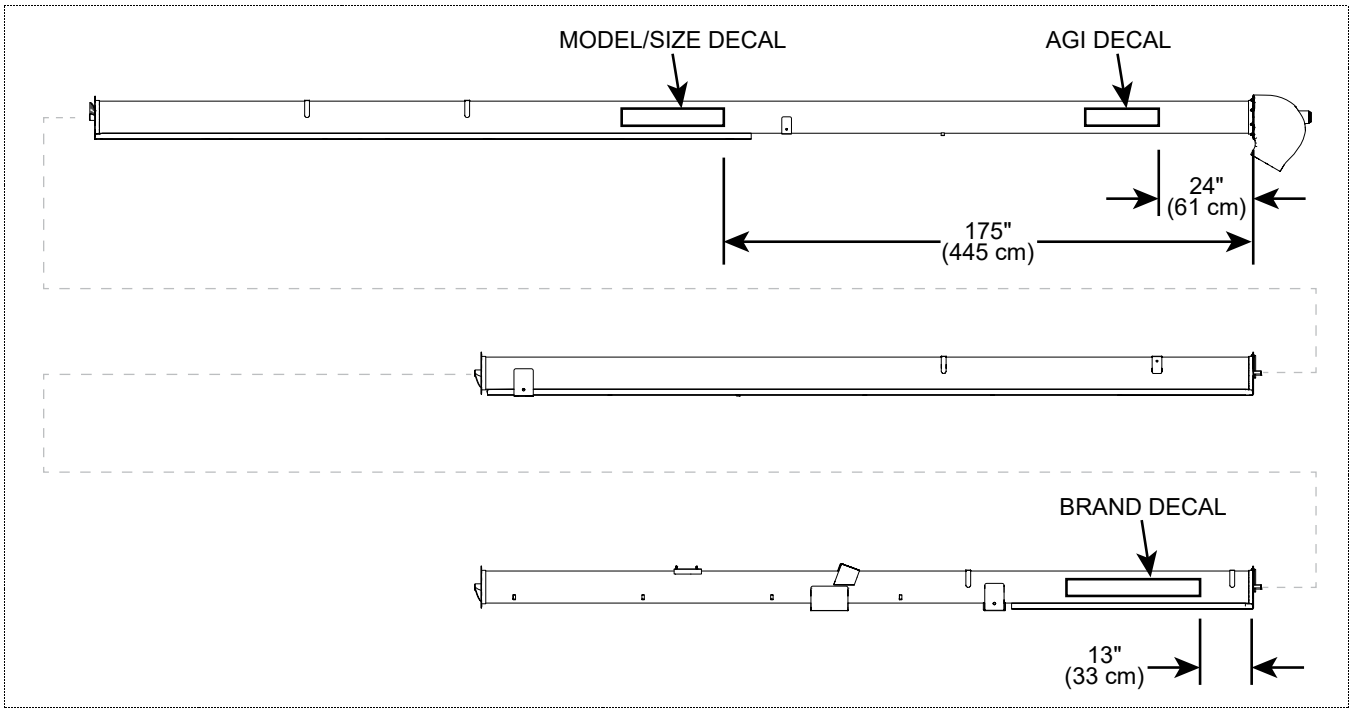

Figure 9. 83 Model Tube Sections

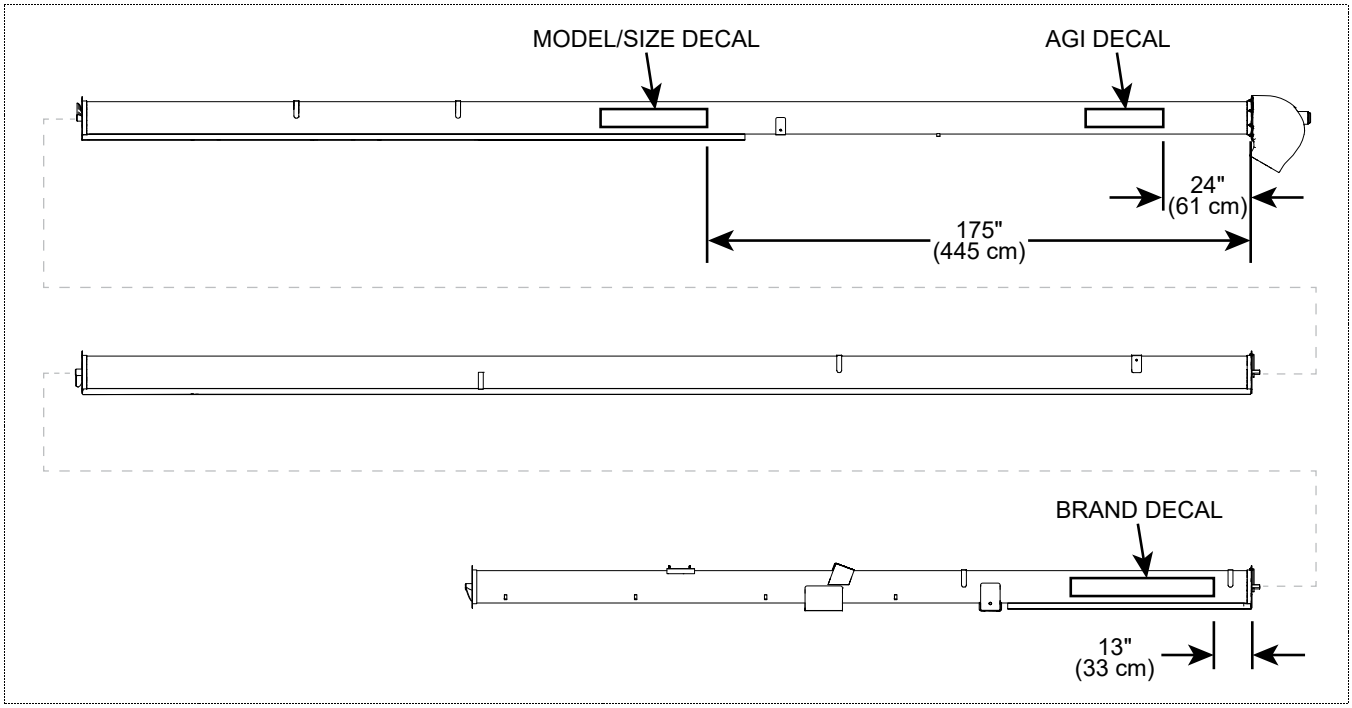

Apply the Logo and Model Decals on the Auger Tubes

Important

Do not cover any existing safety or instruction decals with the model decals.

1. Prepare surface by cleaning thoroughly with soap and water. Surface must be clean and free of dirt, grime, rust and oil. To clean oily surface, wipe with clean cloth and solvent cleaner or isopropyl alcohol.
2. Apply decals to both sides of the auger tube. Center decals vertically on the tube and apply masking tape along the top, creating a gate hinge. Figure A demonstrates.
3. Remove backing paper from decal 6" (15.2 cm) from the top and use the squeegee to adhere decal to the tube, as seen in Figure B. Start at the top center of the decal and work your way outward both left and right using overlapping strokes.
4. As you work your way down the decal, peel back the backing paper 6" (15.2 cm) at a time. Repeat Step 3 until the entire decal has been applied to the tube. See Figure C as an example.
5. Once the entire decal has been properly adhered to the tube, remove tape hinge from front of decal. Remove the front application tape at a sharp 180° angle.
6. Inspect the entire decal for air pockets; if found, remove them by punching a tiny hole with a pin and then squeegee the surface flat.
7. As a final process, squeegee the corners and edges of the decal to ensure proper adhesion and to prevent premature peeling.

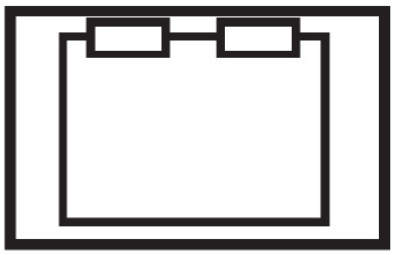

A

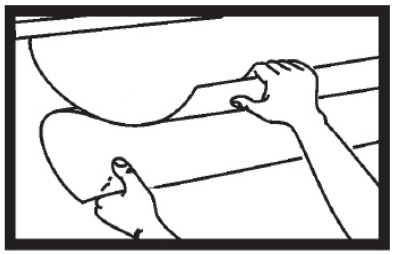

B

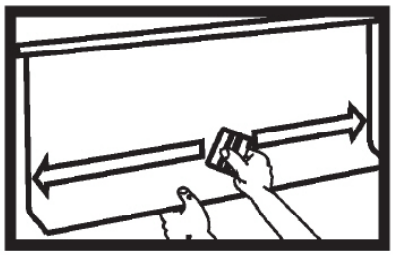

C

4.5. Install Hydraulic Lift Cylinders

Figure 10. Assemble the Cylinder Mount (63/73 Models)

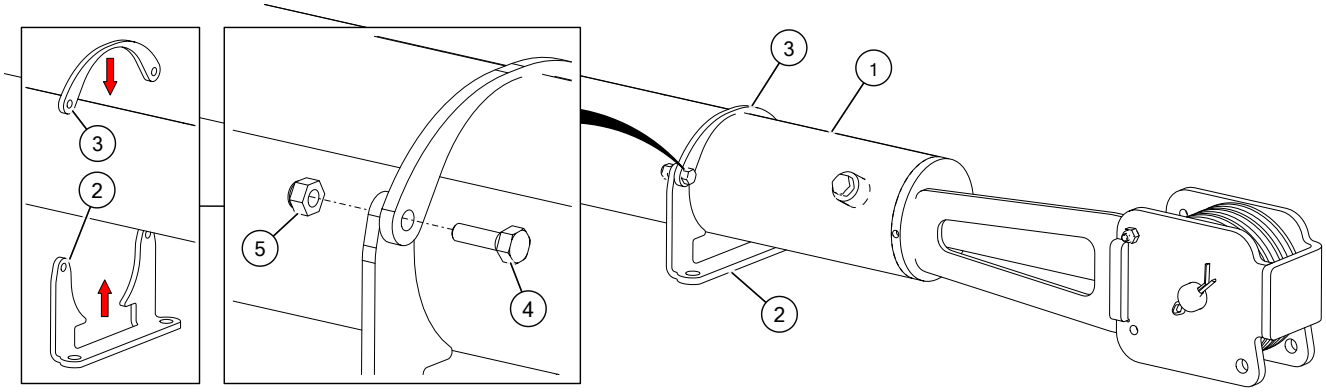

1	hydraulic lift cylinder	4	bolt, 5/16" x 1"
2	upper cylinder mount bracket	5	lock nut, 5/16"
3	lower cylinder mount plate		

Figure 11. Installing the Lift Cylinder (53/63 Models)

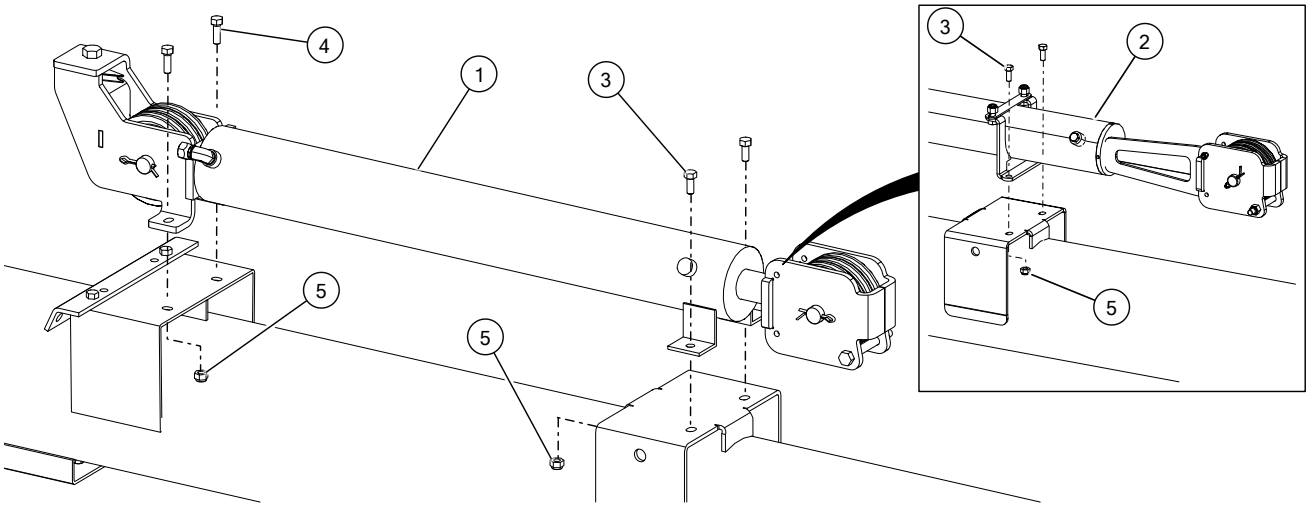

Assembly Notes:

- Rotate tube so that the cylinder mount brackets are facing up.
- Hydraulic lift cylinders must be positioned with the rod end towards the discharge end.

1	hydraulic lift cylinder (53 model)	4	bolt, 7/16" x 1-1/4"
2	hydraulic lift cylinder (63 model)	5	lock nut, 7/16"
3	bolt, 7/16" x 1"		

Figure 12. Installing the Lift Cylinder (73/83 Models)

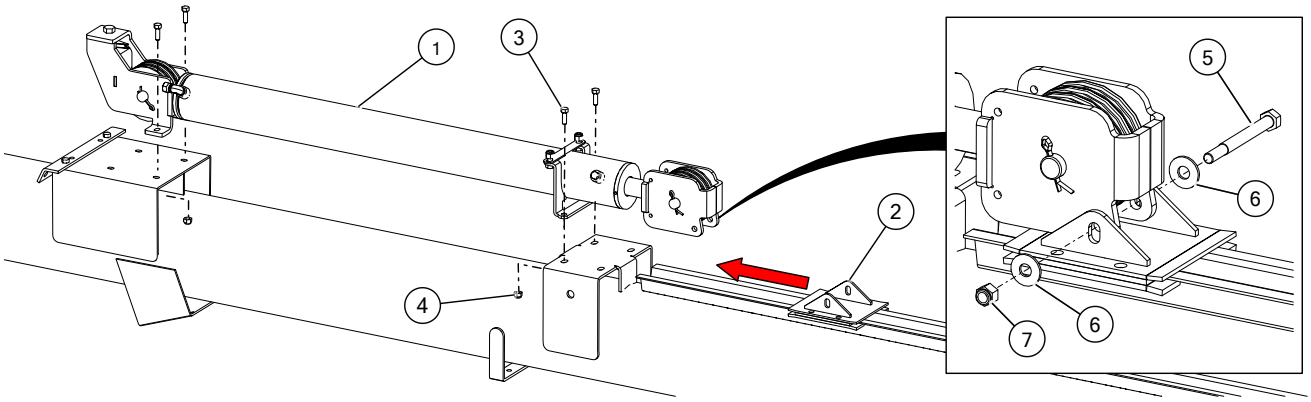

Assembly Notes:

- Rotate tube so that the cylinder mount brackets are facing up.
- Hydraulic lift cylinders must be positioned with the rod end towards the discharge end.
- The pre-installed bolts on the cylinder assembly do not need to be removed before installing on the tube.
- Do not overtighten the ram guide hardware. The bolt should be able to move freely within the ram guide slot.

1	hydraulic lift cylinder	5	bolt, 1/2" x 5-1/2"
2	cylinder ram guide	6	flat washer, 1/2"
3	bolt, 7/16" x 1-1/4"	7	lock nut, 1/2"
4	lock nut, 7/16"		

4.6. Connect Auger Tube Sections Together

Important

Always strap tubes to the support stands to prevent the tubes from rolling off the stands.

Figure 13. Connecting Auger Tube Sections and Flights

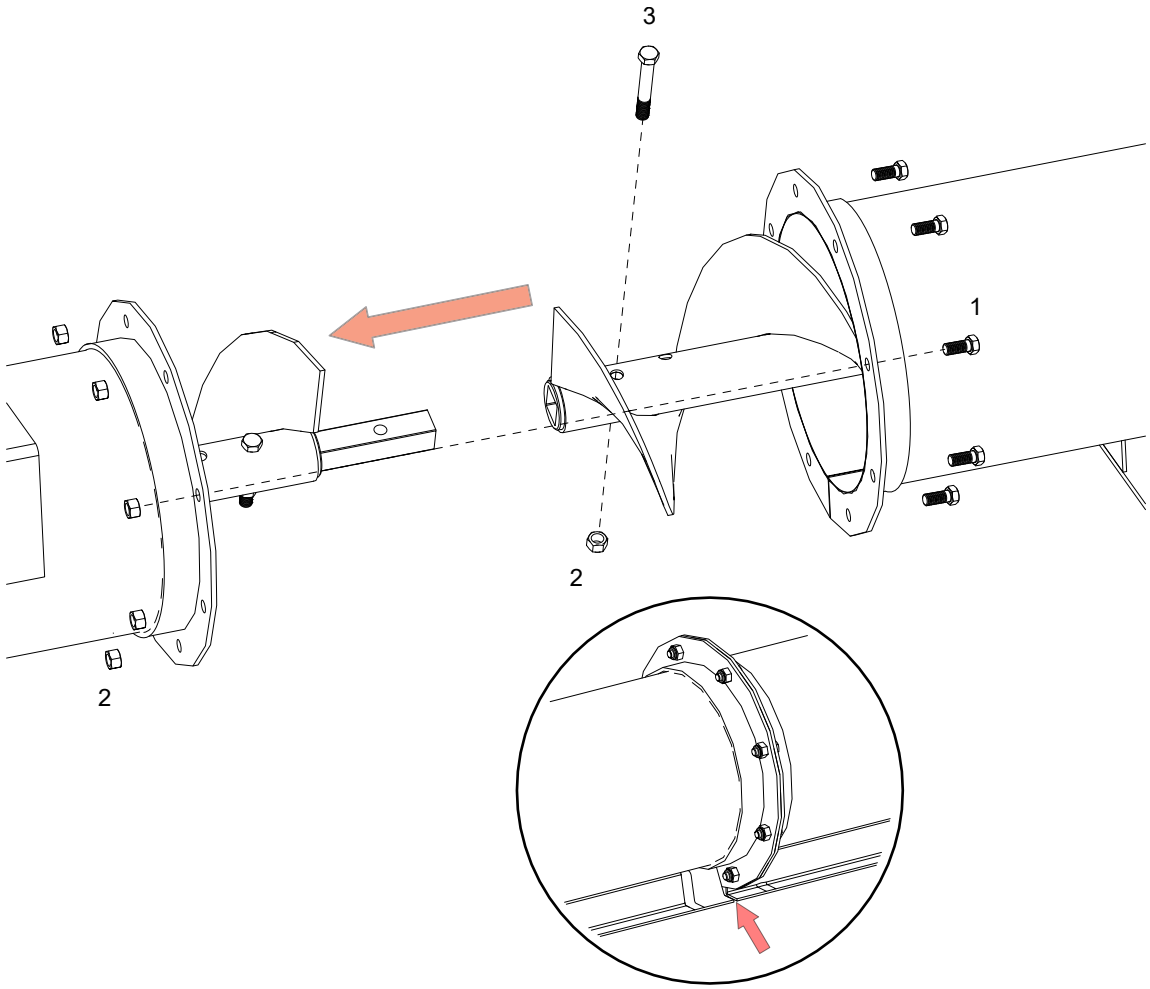

Assembly Notes:			
• Use a straight edge to align tracks at the joint to ensure smooth slide for track shoe. • Align flightings to ensure a continual spiral of auger surface.			
1	bolt, 7/16" x 1"	3	bolt, 7/16" x 3"
2	lock nut, 7/16"		

4.7. Install the Track Shoe, Track Stop, & Lift-Assist Arm

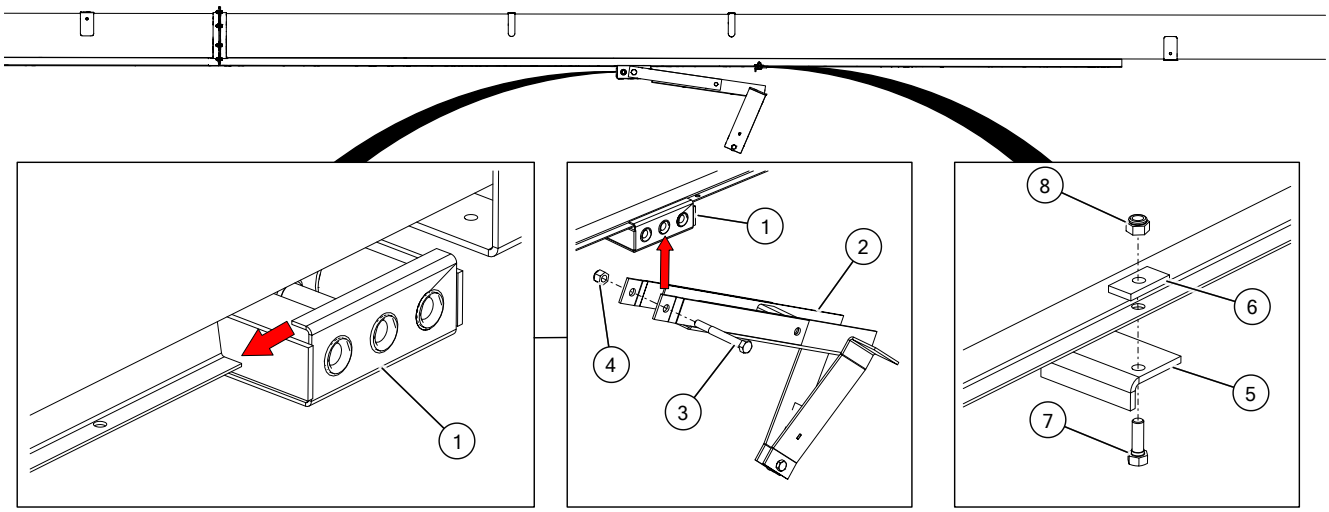

Assembly Notes:

- Slide the track shoe onto the track before attaching the upper track stop.
- Tracks must be aligned at the joint to provide a smooth slide for the track shoe.
- The flat iron washers must be on top of the track.
- The track stop must be centered on the track.
- Attach the lift-assist arm to the center hole on the track shoe. Do not overtighten; this bolt acts as a pivot point.

1	track shoe	5	track stop
2	lift-assist arm	6	flat iron washer, 7/16"
3	bolt, 3/4" x 6-1/2"	7	bolt, 7/16" x 1-1/4"
4	lock nut, 3/4"	8	lock nut, 7/16"

Track Stop Locations

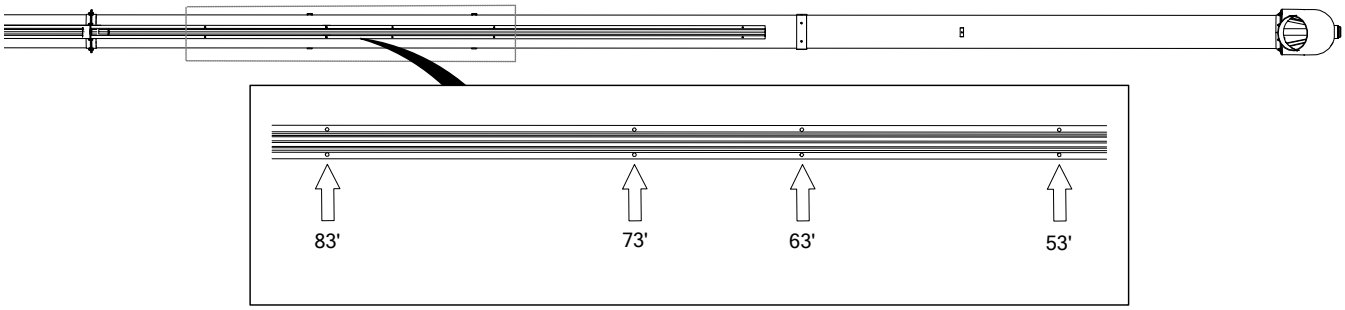

4.8. Angle Ring Support Bracket (83 Model)

Once the tubes are bolted together, install the angle ring support brackets at each connecting location between the tubes.

1. Install an angle ring support bracket at each tube flange connection by inserting one end at a time through the holes in the tabs in the track.
2. Secure these brackets in place with two 1/2" lock nuts. Tighten nuts.

Figure 14. Installing the Angle Ring Support Bracket

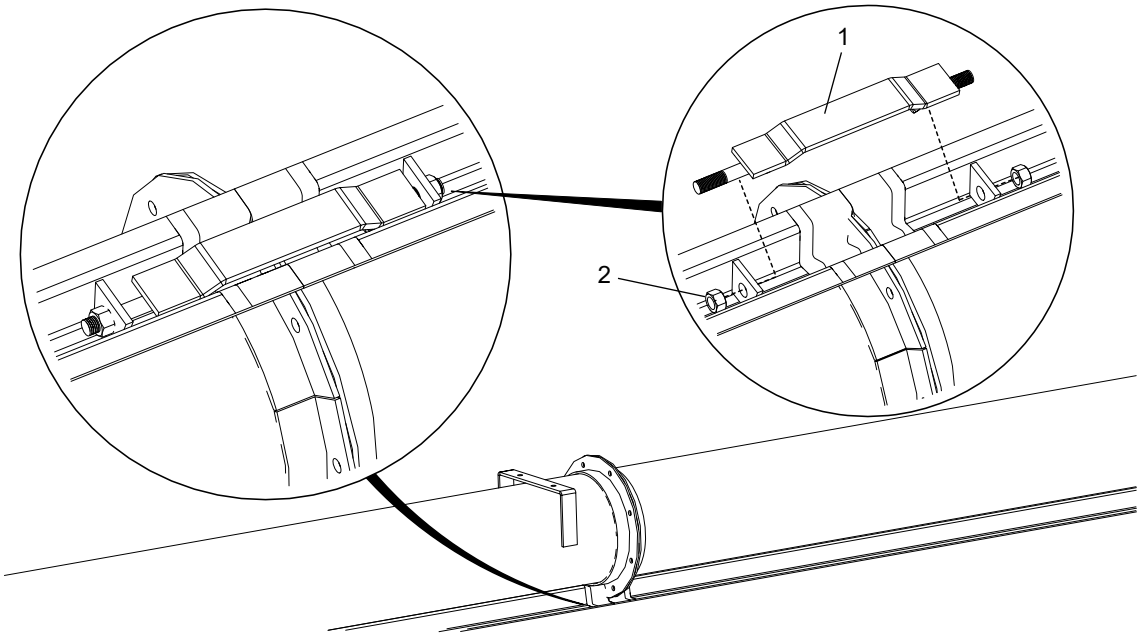

1	angle ring support bracket	2	lock nut, 1/2"

4.9. Installing the Boot on the Auger Tube

WARNING Components are heavy and create a crushing hazard if improperly handled. Be sure to use proper hoisting equipment and procedures, and ensure lifting apparatus is secure. Lock out the lifting apparatus before working around or under the raised components; failure to do so may cause serious personal injury.

Remove the Flight Holder from the Boot Flighting

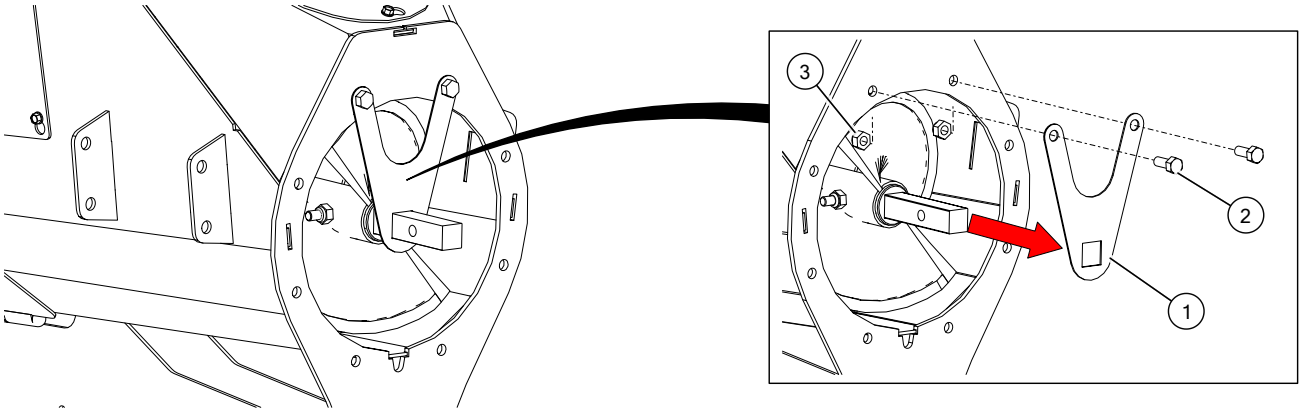

1	flight holder	3	lock nut, 7/16"
2	bolt, 7/16" x 1"		

Connect the Boot and Auger Flightings

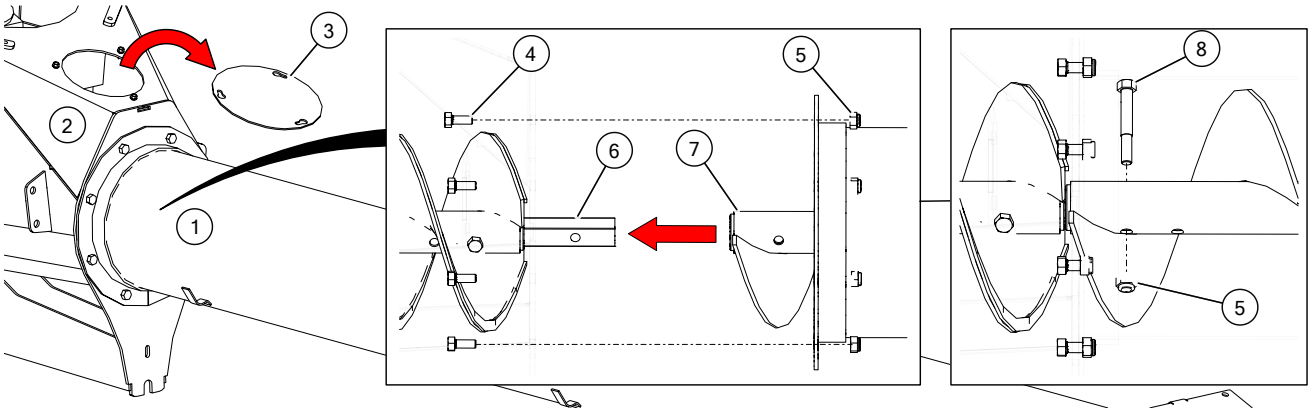

Assembly Notes:

- The boot gearbox is sent from the factory filled half way with EP90 gear oil. Before further assembly, check oil level to make certain the gearbox is half full. Add oil if necessary. Do not use grease.
- Align flightings to ensure a continual spiral of auger surface.

1	lower tube	5	lock nut, 7/16"
2	boot assembly	6	boot flighting
3	top access panel	7	lower tube flighting
4	bolt, 7/16" x 1"	8	bolt, 7/16" x 3"

4.10. Set the Thrust Adjuster Nut

The thrust adjuster lock nut must be tightened until the connection between the bearing, bushing, and lock nut is snug.

Important

When fully tightened, between 1/4" and 3/4" (5 mm and 20 mm) of threaded shaft must be visible above the lock nut to ensure that the nylon locking mechanism is fully engaged.

4.10.1 Single Nut Flight Tensioning

➡ When equipped:

1. Remove the dust cap.
2. Wedge a piece of wood into the flight at the boot end to prevent the flight from rotating.
3. Tighten the lock nut until the bushing is snug (the bushing does not move when pushed firmly by a punch) and between 1/4" and 3/4" (5 mm and 20 mm) of threaded shaft is visible above the nut.
   - If less than 1/4" (6 mm) of threaded shaft is visible, remove one or more 1/4" shims (depending on what is required), and re-tighten until fully tightened.
   - If the nut cannot be tightened to the point where the bushing is snug and more than 3/4" (19 mm) of threaded shaft is visible, install one or more additional 1/4" spacers (not supplied, but available to order) between the bearing and the bushing, and re-tighten until fully tightened.
4. Remove the piece of wood from the flight.
5. Using the grease zerk, fill the bottom bearing cavity with grease until it comes through the bearing housing.
6. Fill the bearing housing with a full tube of grease. If the entire tube does not fit, put some of the grease inside of the dust cap.
7. Re-install the dust cap.

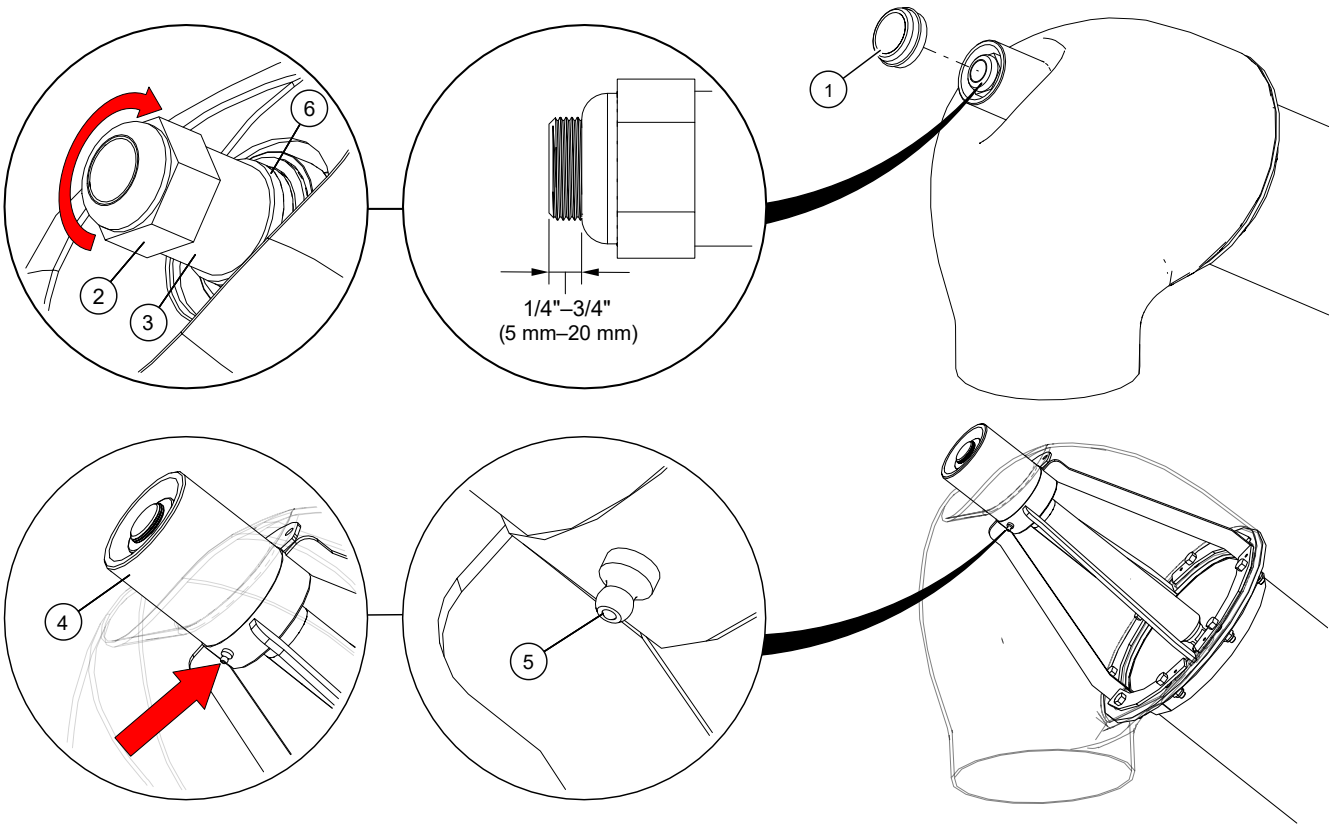

Scan the QR code to watch a video on how to grease the upper bearing.

Assembly Note:	
• Use SAE multi-purpose high-temperature grease with extreme pressure (EP) performance.	
1	dust cap
2	lock nut, 1-1/2"
3	bushing
4	bearing housing
5	grease zerk
6	shim, 1/4"

4.10.2 Double Nut Flight Tensioning

➡ When equipped:

1. Remove the dust cap.
2. Install and tighten the thin hex nut until the flighting starts to rotate in the tube. Using a punch and hammer, check to see if the bushing can rotate.
   - If the bushing rotates, remove the hex nut and thrust bushing. Install one or more 1/4" shims between the bearing and the bushing. Re-install the thrust bushing and tighten the hex nut until the flight starts rotating in the tube.

- If less than 1/4" (6 mm) of the threaded shaft is visible, remove one or more 1/4" shims (depending on what is required), and re-tighten the hex nut as per step 2.

3. Once the bushing is unable to rotate, install the thin lock nut and lock in place against the hex nut. Ensure there is at least 1/4" (6 mm) of the shaft exposed.
4. Using the grease zerk, fill the bottom bearing cavity with grease until it comes through the bearing housing.
5. Fill the bearing housing with a full tube of grease. If the entire tube does not fit, put some of the grease inside of the dust cap.
6. Re-install the dust cap.

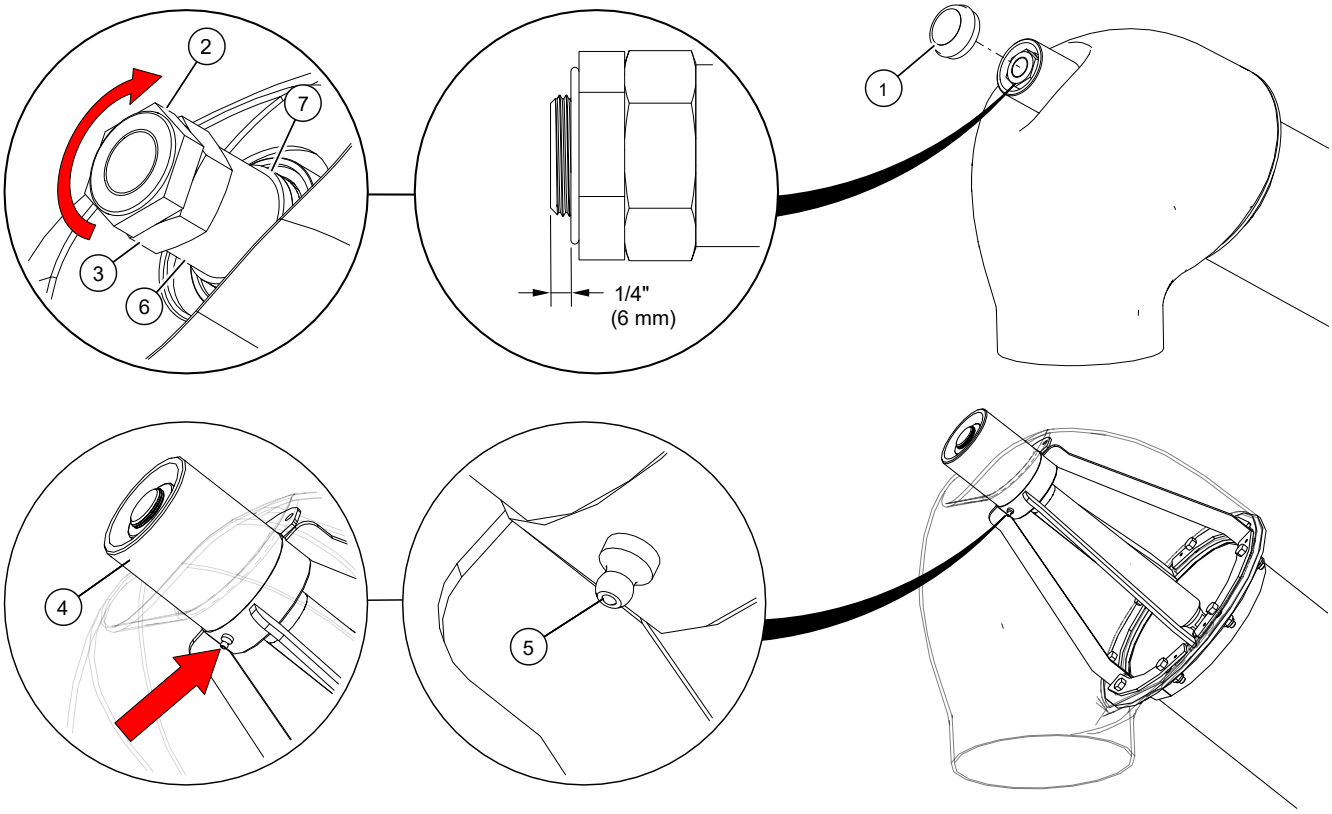

Assembly Note:

- Use SAE multi-purpose high-temperature grease with extreme pressure (EP) performance.

1	dust cap	5	grease zerk
2	thin lock nut	6	bushing
3	thin hex nut	7	shim, 1/4"
4	bearing housing		

4.11. Install Truss Support Brackets

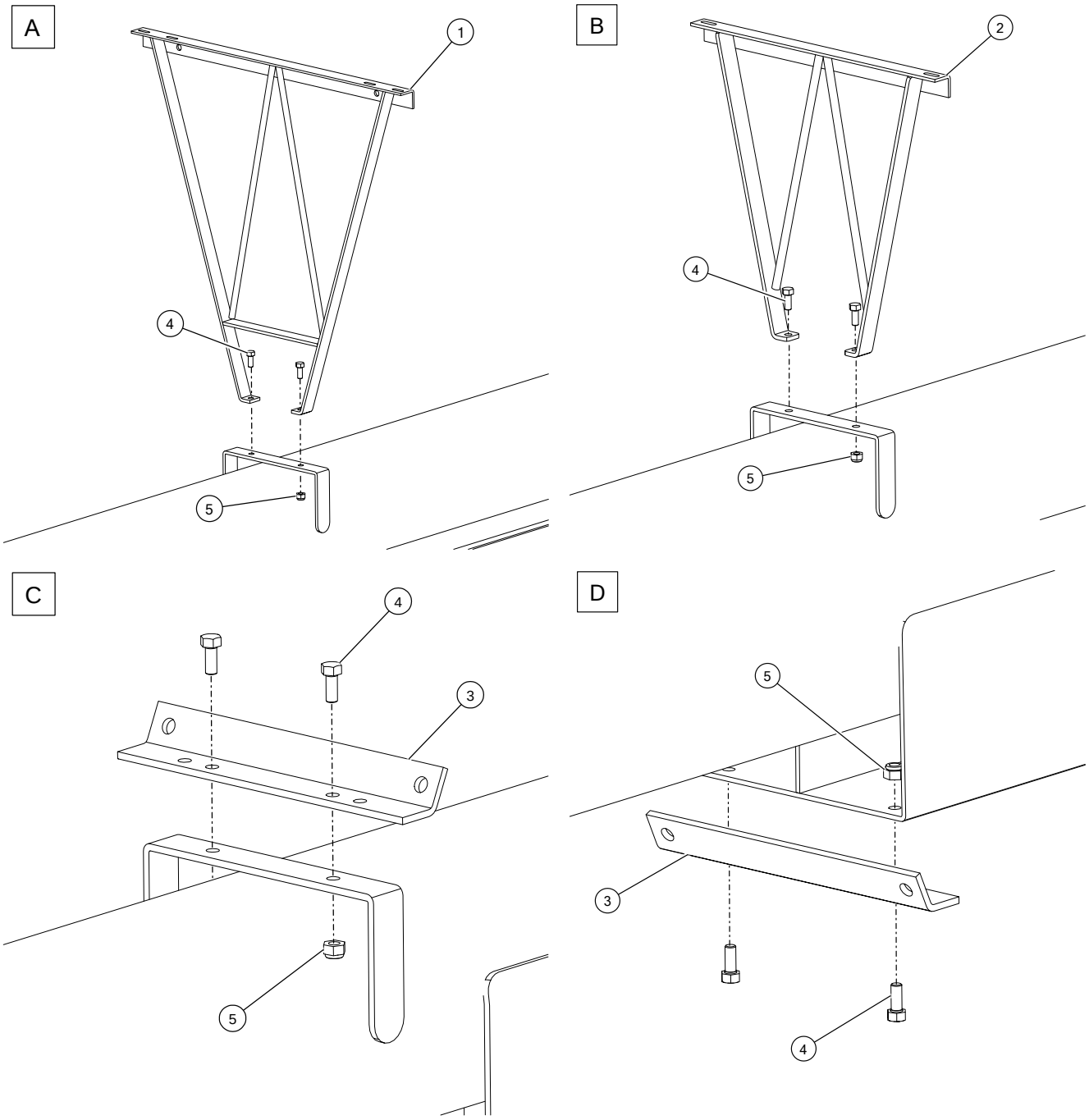

1	truss bracket, high	4	bolt, 7/16" x 1"
2	truss bracket, standard	5	lock nut, 7/16"
3	truss cable bracket		

53 Model Truss Supports

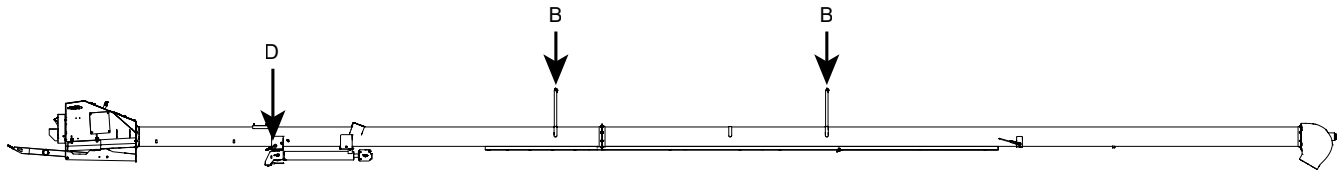

63 Model Truss Supports

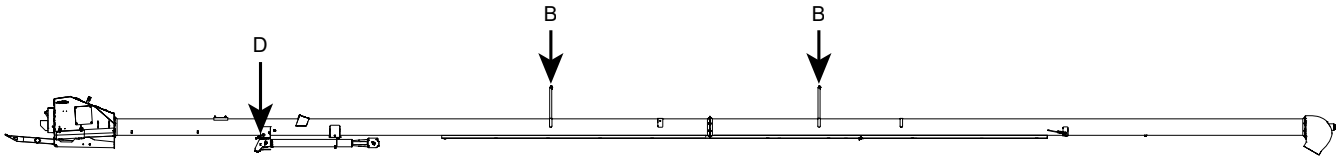

73 Model Truss Supports

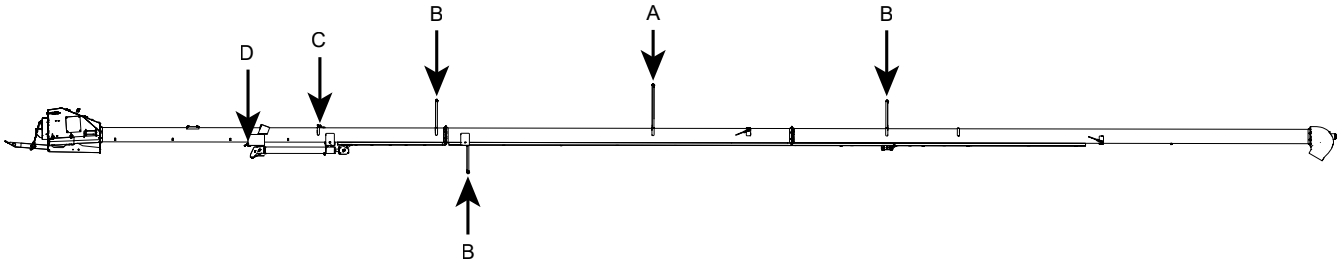

83 Model Truss Supports

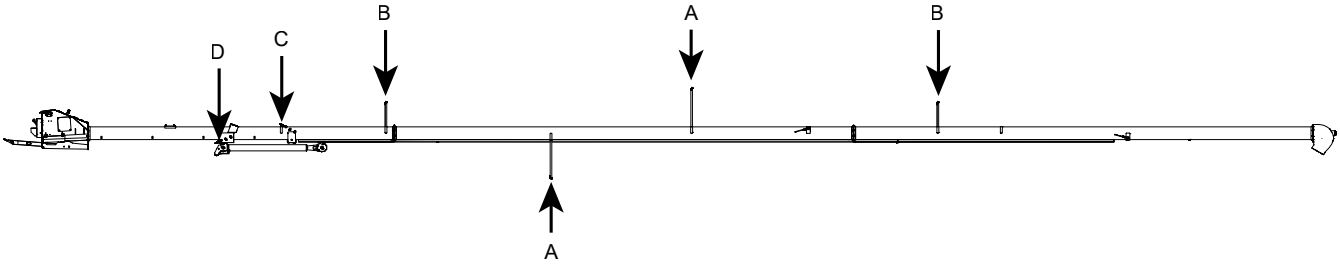

4.12. Install Truss Cables

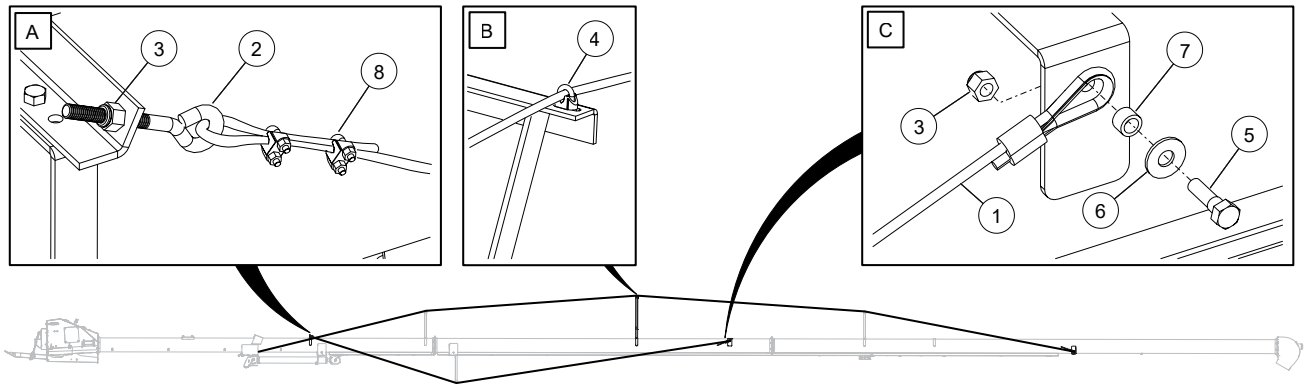

1	cable	6	flat washer, 1/2"
2	eyebolt	7	spacer bushing
3	lock nut, 1/2"	8	cable clamp, 5/16" (53/63/73 models)
4	cable clamp, 5/16"		cable clamp, 3/8" (83 model)
5	bolt, 1/2" x 1-3/4"		

53 Model

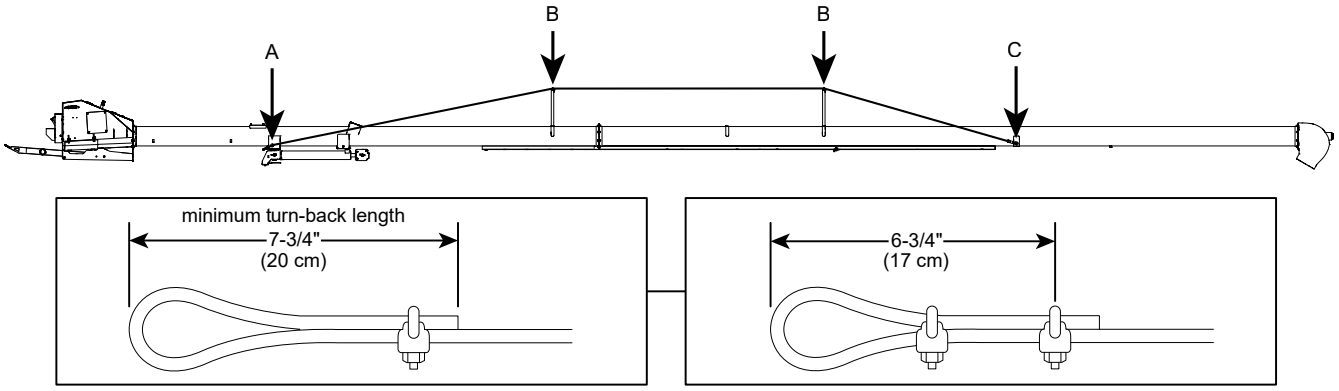

63 Model

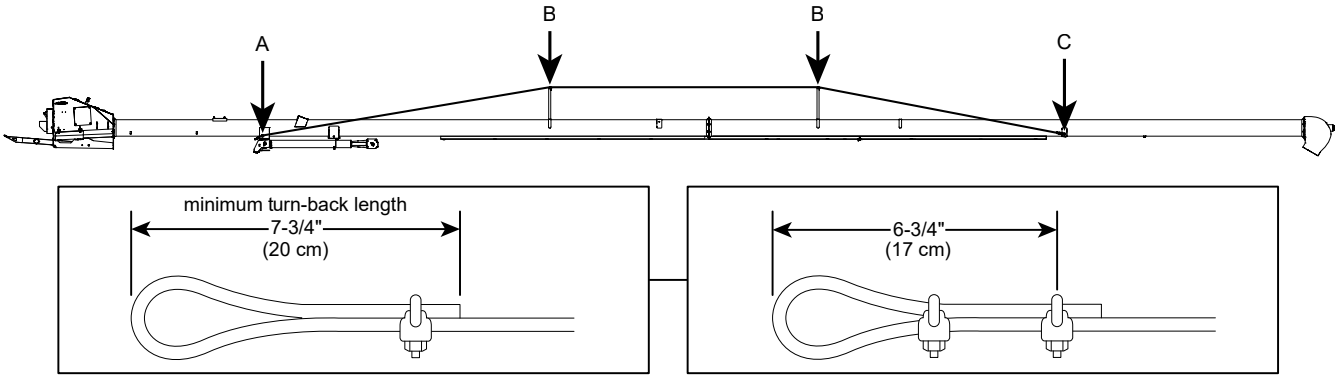

73 Model

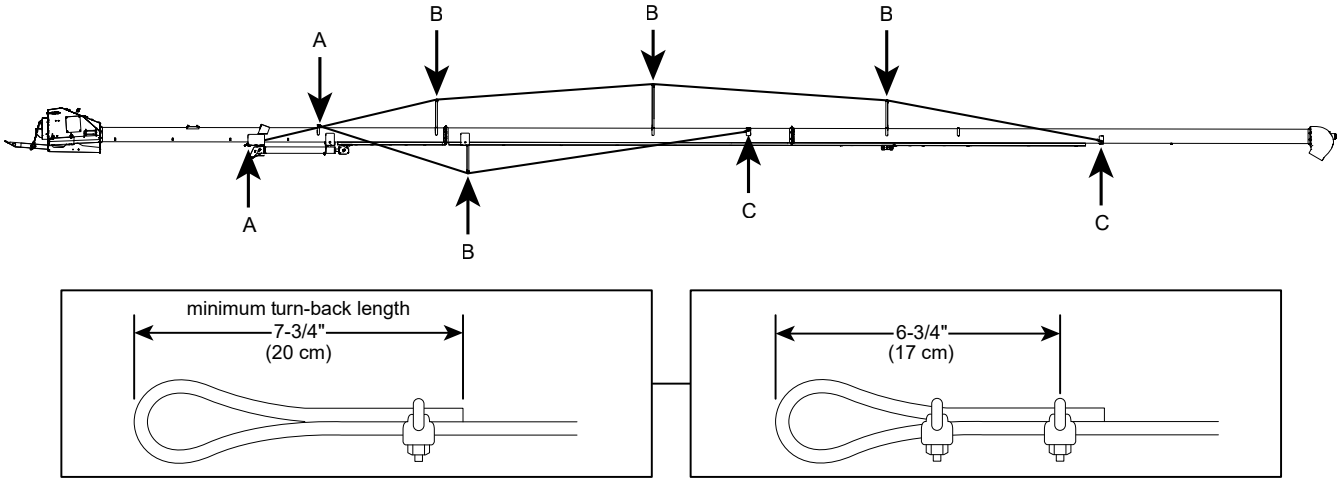

83 Model

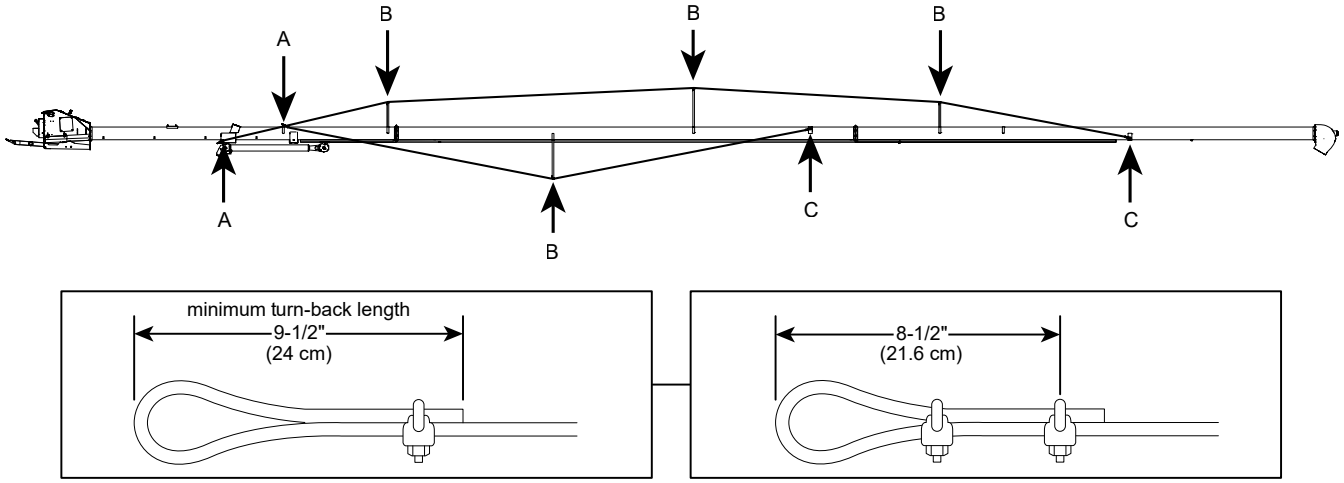

1. Thread the boot end of the truss cable through the eyebolts and pull out all the slack. Ensure the minimum turn-back length of cable has been reached. Secure the cable in place by installing and tightening two cable clamps.
   a. Apply first clamp one base width from the minimum turn-back length of cable with the u-bolt over the dead end. Live end rests in clamp saddle. Turn nuts firmly, but do not tighten.
   b. Apply second clamp as close to loop as possible with the u-bolt over the dead end. Live end rests in clamp saddle. Apply tension and turn nuts firmly, but do not tighten.

   Important

   Do not tighten cable clamps at this time.

Important

The upper end of augers equipped with truss cables should have an upward bow before being placed on the transport undercarriage (the auger tube will straighten when fully assembled). Place supports under the discharge end until the upward bow is correct. The upward bow should be as follows:

- 53 Model: 2" (5 cm)
- 63 Model: 3" (7.6 cm)
- 73 Model: 5" (12.7 cm)
- 83 Model: 7" (17.8 cm)

2. Tighten eyebolts to take the remaining slack out of truss cable and to maintain the appropriate upward bow.
3. After tension is adjusted, tighten all cable clamps to the recommended torque.

Cable Clamp	Nut Torque
5/16"	20 ft·lb
3/8"	30 ft·lb

4. Check for proper side alignment.

Important

Once the auger is fully assembled, adjust the truss cables on all units (because of initial stretching). The cables may also require adjustment for side alignment.

Note

Use zipties to secure the cable ends.

4.13. Assemble the Frame (53/63/73 Models)

1. Fasten the lower reach arms to the axle with three 1/2" x 1-1/4" bolts and lock nuts on each side.
2. Attach the long cross member to the bottom of the bracket on the lower reach arms using two 1/2" x 1-1/4" bolts and lock nuts.
3. Loosely attach the short cross member between the lower reach arms with two 1/2" x 1-1/2" bolts and lock nuts, sandwiching the stabilizer braces between the short cross member and small frame brackets on each side. Leave the hardware loose until the other ends of the stabilizer braces are connected.
4. Secure the tubing cross braces to the welded lugs on the lower reach arms with four 1/2" x 1-1/4" bolts and lock nuts. Use a 1/2" x 1-1/4" bolt and lock nut to connect braces where they cross.
5. Tighten all nuts securely.
6. Check that pressure of pre-inflated tires matches pressure indicated on tire sidewall. Mount wheels on hubs. Torque the wheel bolts to 80 ft·lb (± 10 ft·lb) using the pattern shown.

Figure 15. Lower Frame (53/63/73 Models)

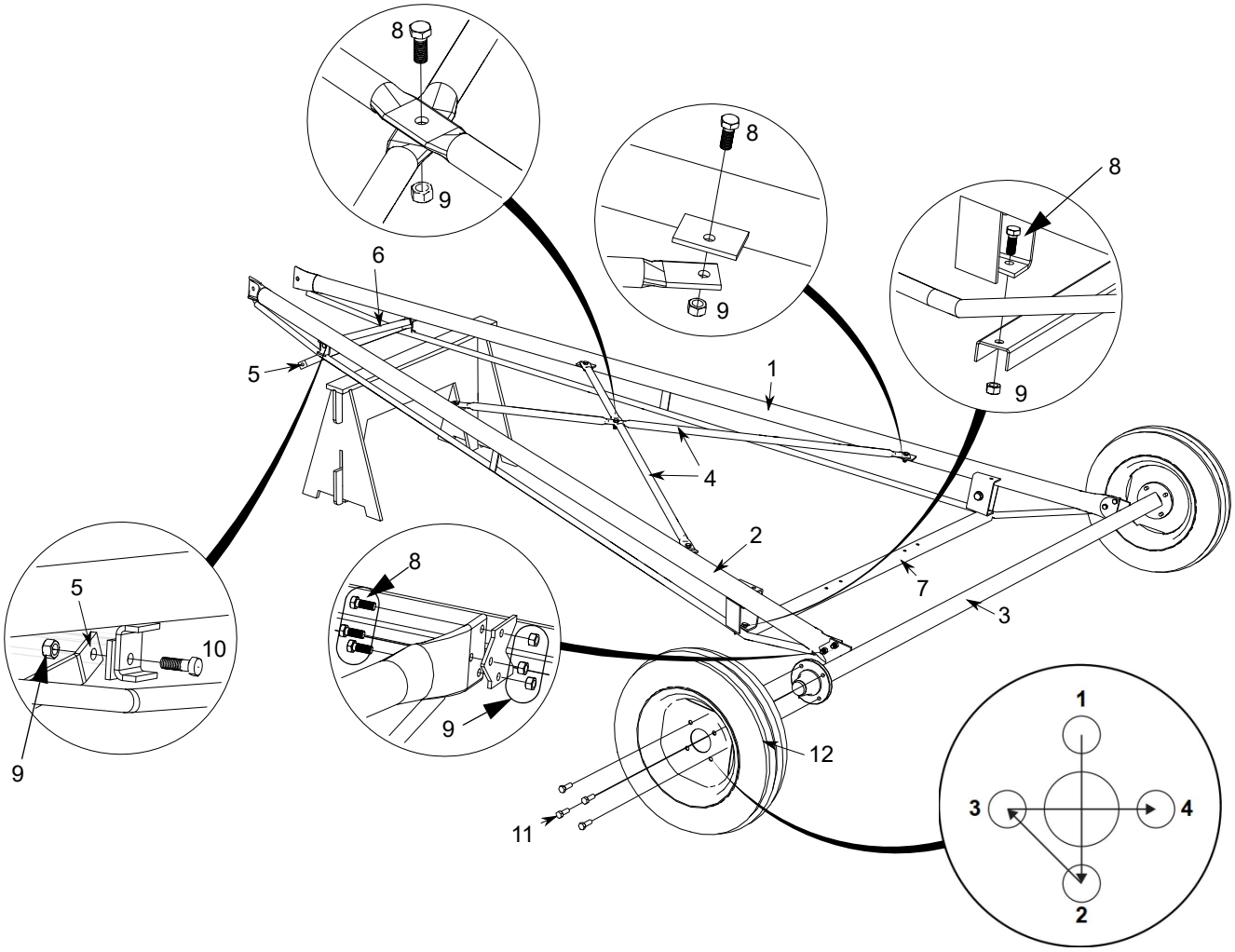

1	lower reach arm, LH	7	long cross member
2	lower reach arm, RH	8	bolt, 1/2" x 1-1/4"
3	axle	9	lock nut, 1/2"
4	frame cross brace	10	bolt, 1/2" x 1-1/2"
5	frame stabilizer brace	11	wheel bolt, 1/2" x 1"
6	short cross member	12	wheel

4.14. Assemble the Frame (83 Model)

1. Fasten the lower reach arms to the axle with three 5/8" x 2" bolts and lock nuts on each side.
2. Attach the two corner braces between the lower frame assembly and the axle with two 1/2" x 1-1/4" bolts, two 1/2" x 1-1/2" bolts, and four lock nuts.
3. Loosely attach the short cross member between the lower reach arms with two 5/8" x 2" bolts and lock nuts, sandwiching the stabilizer braces between the short cross member and small frame brackets on each side. Leave the hardware loose until the other ends of the stabilizer braces are connected.
4. Secure the tubing cross braces to the welded lugs on the lower reach arms with four 1/2" x 1-1/4" bolts and lock nuts. Use a 1/2" x 1-1/4" bolt and lock nut to connect braces where they cross.
5. Tighten all nuts securely.

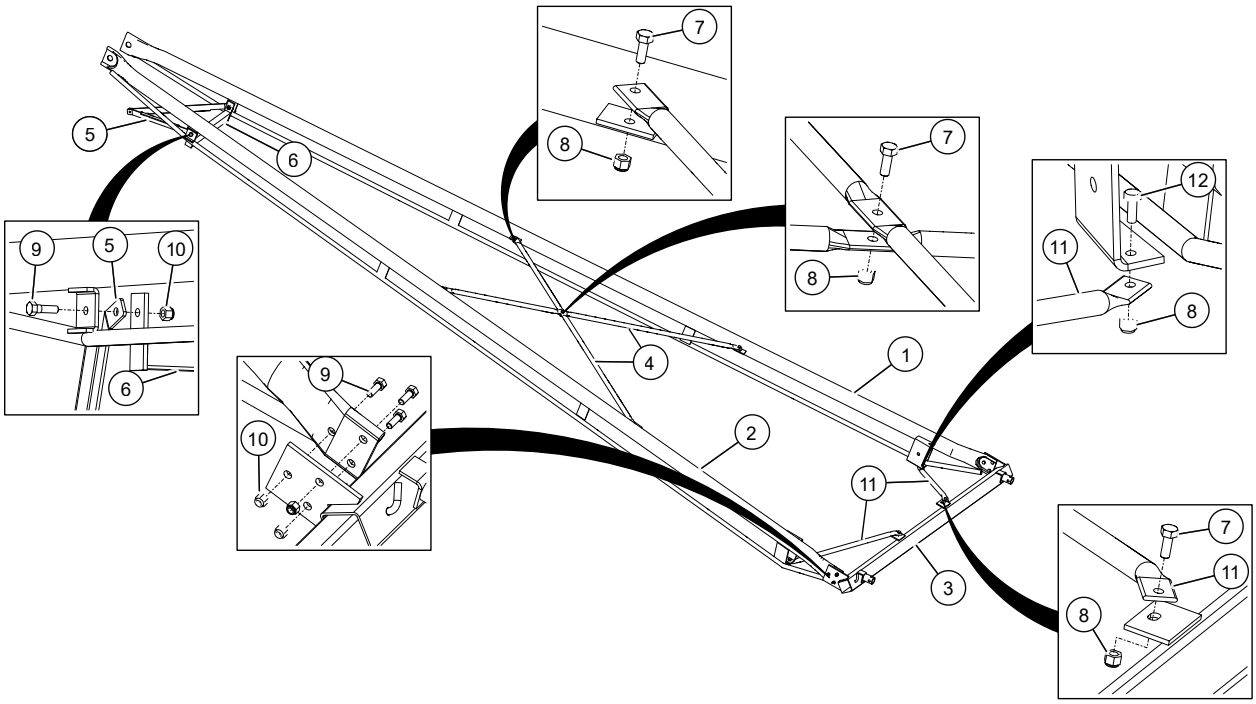

1	lower reach arm, LH	7	bolt, 1/2" x 1-1/4"
2	lower reach arm, RH	8	lock nut, 1/2"
3	axle	9	bolt, 5/8" x 2"
4	frame cross brace	10	lock nut, 5/8"
5	frame stabilizer brace	11	corner brace
6	short cross member	12	bolt, 1/2" x 1-1/2"

6. Install the axle extensions on the axle.
7. Check that pressure of pre-inflated tires matches pressure indicated on the tire sidewall. Mount the wheels on the hubs. Torque the wheel bolts to 100 ft·lb (± 10 ft·lb) using the pattern shown.

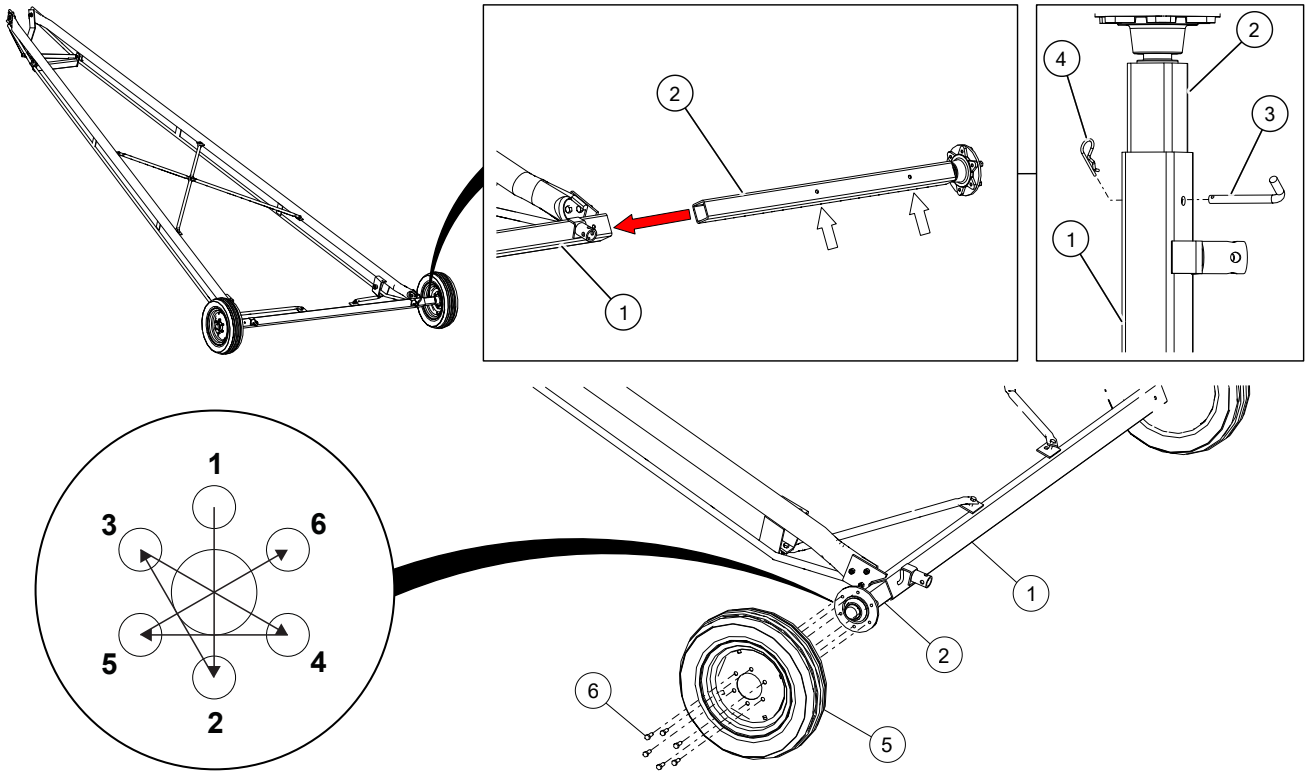

1	axle	4	hairpin
2	axle extension	5	wheel
3	saddle pin	6	wheel bolt, 1/2" x 1"

4.15. Connect the Auger Tube to the Frame

1. Raise the discharge end of auger with a front end loader and a strong sling/chain or block and tackle. The height should be sufficient to clear the undercarriage assembly.

   WARNING Do not remove tube support until the assembly in this section has been completed.

2. Position the undercarriage beneath the tube assembly.
3. Tighten the two bolts that attach the short cross member to the small frame brackets.
4. Position the stabilizer brackets and attach the lower reach arms to the bracket welded on the lower end of the auger tube (see Detail A).
   - **53/63/73 models:** Use 3/4" x 2" bolts and lock nuts. Do not overtighten. Tighten snug only; these bolts act as pivot points.
   - **83 model:** Use 3/4" x 2-1/2" bolts, flat washers, bushings, and lock nuts. Tighten the bolts securely; the bushings are used as pivot points.
5. Fasten the flat braces to the stabilizer braces (see Detail B).
   - **53/63/73 models:** Use a 1/2" x 2" bolt and lock nut for the first set of holes (furthest from intake) on the stabilizer brace, and a 1/2" x 1-1/2" bolt and lock nut in the other hole on the stabiliizer brace.
   - **83 model:** Use a 5/8" x 2" bolt and lock nut for the first set of holes (furthest from intake) on the stabilizer brace, and a 5/8" x 1-1/2" bolt and lock nut in the other hole of the stabilizer brace.
6. Attach the upper lift arms to the lower reach arms (see Detail C).
   - **53/63/73 models:** Use 3/4" x 2" bolts, flat washers, and lock nuts. Do not overtighten. Tighten snug only; these bolts act as pivot points.
   - **83 model:** Use 3/4" x 2-1/2" bolts, flat washers, bushings, and lock nuts. Tighten the bolts securely; the bushings are used as pivot points.
7. Attach the frame cross braces to the upper reach arms by loosely attaching the frame cross braces using five 1/2" x 1-1/4" bolts and lock nuts (see Details D and E).
8. Attach the upper lift arms to the center hole on the lift-assist arms (see Detail F).
   - **53/63/73 models:** Use a 3/4" x 7-1/2" bolt and lock nut. Do not overtighten. Tighten snug only; this bolt acts as a pivot point.
   - **83 model:** Use a 3/4" x 8-1/2" bolt, two flat washers, two bushings, and one lock nut. Tighten the bolt securely; the bushings are used as pivot points.
9. Lower the upper end of the auger slowly until the track shoe rests against the upper track stop.

Figure 16. Connecting the Auger Tube to Frame (53/63/73 Models)

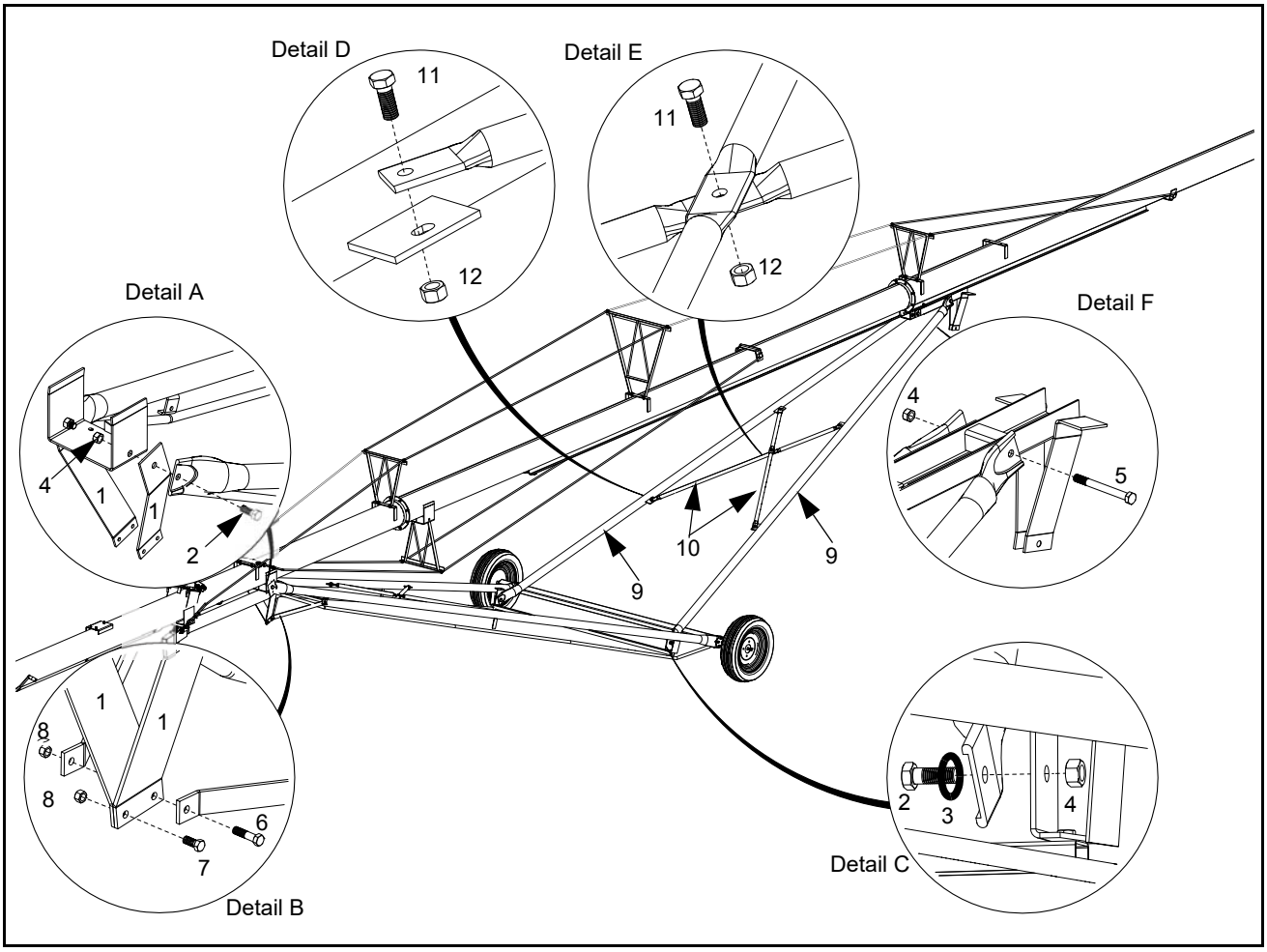

1	stabilizer bracket	7	bolt, 1/2" x 1-1/2"
2	bolt, 3/4" x 2"	8	lock nut, 1/2"
3	flat washer, 3/4"	9	upper reach arm
4	lock nut, 3/4"	10	frame cross brace
5	bolt, 3/4" x 7-1/2"	11	bolt, 1/2" x 1-1/4"
6	bolt, 1/2" x 2"	12	lock nut, 1/2"

Figure 17. Connecting the Auger Tube to Frame (83 Model)

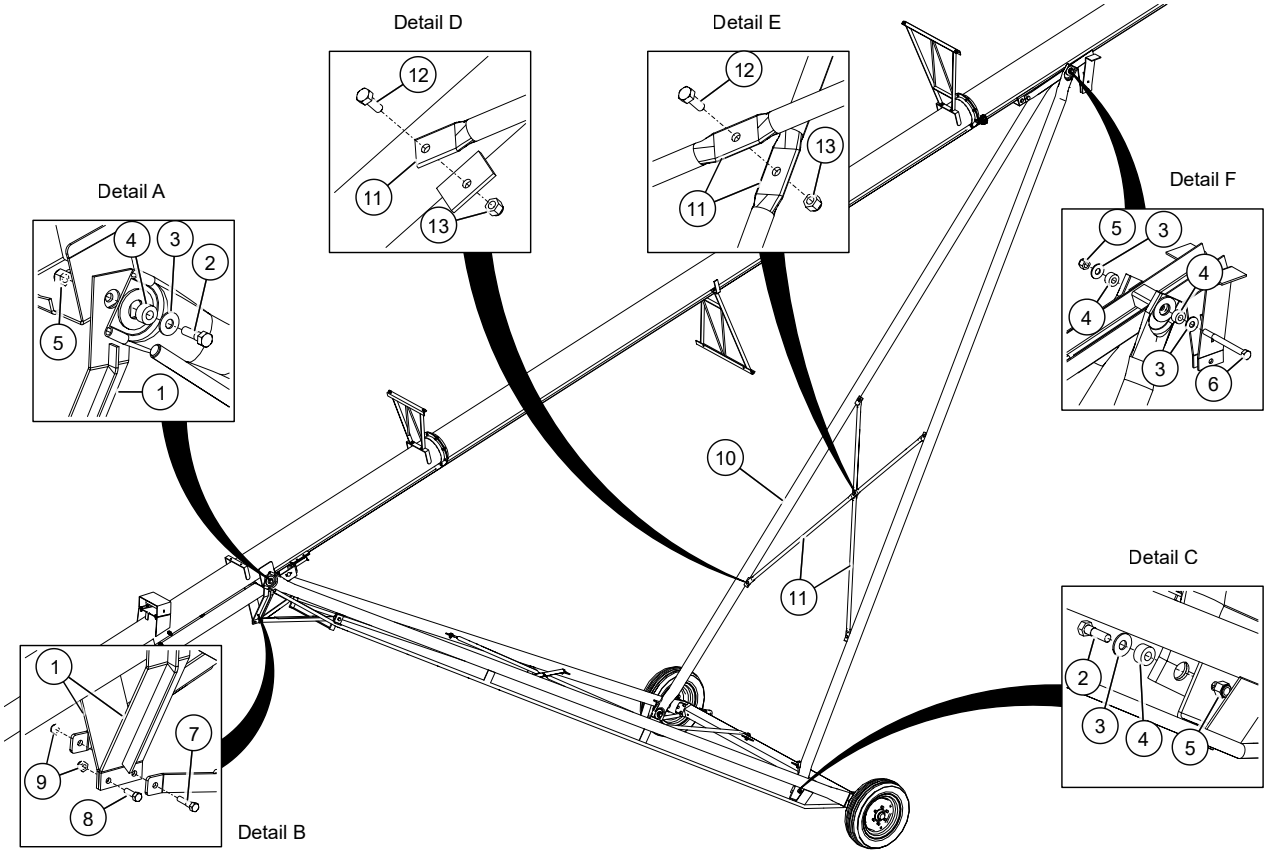

1	stabilizer bracket	8	bolt, 5/8" x 1-1/2"
2	bolt, 3/4" x 2-1/2"	9	lock nut, 5/8"
3	flat washer, 3/4"	10	upper reach arm
4	spacer bushing	11	frame cross brace
5	lock nut, 3/4"	12	bolt, 1/2" x 1-1/4"
6	bolt, 3/4" x 8-1/2"	13	lock nut, 1/2"
7	bolt, 5/8" x 2"		

4.16. Install the Auger Tube Lift Cylinders and Cables

⚠ CAUTION The track shoe must rest against track stop when adjusting cable.
If this isn't done, the auger can raise higher than designed to lift, resulting in damage to auger and possible injury to personnel.

Note

Although the lift cable is factory installed on the cylinder, make sure that the swaged cable sleeves on the cylinder are secure and the cable is properly seated in the cable sheaves before attaching the cable to the lift-assist.

1. With the auger in the full down position (track shoe resting solidly against the track stop, and the lift-assist arm seated against the track), thread the cable around the cable-attach rod on the lift-assist arm.
2. Pull the cable very tight. Ensure the minimum turn-back length of cable has been reached.
3. Secure the cable in place by installing and tightening three cable clamps.
   a. Apply the first clamp one base width from the minimum turn-back length of cable with the u-bolt over the dead end. Live end rests in clamp saddle. Tighten nuts evenly to the recommended torque.
   b. Apply the second clamp as close to the loop as possible with the u-bolt over the dead end of the cable. The live end of the cable rests in the clamp saddle. Tighten the nuts by hand.
   c. Apply the third clamp evenly between the first two with the u-bolt over the dead end of the cable. The live end of the cable rests in the clamp saddle.
   d. Apply light tension to the cable to take up any slack, and tighten all nuts evenly to the recommended torque.

Important

Lift cables will stretch with initial use. Check and adjust frequently.

Model	Cable Clamp	Turn-Back Length	Nut Torque
53/63/73	5/16"	7-3/4" (20 cm)	20 ft·lb
83	3/8"	9-1/2" (24 cm)	30 ft·lb

Figure 18. Connecting the Lift Cylinder Cable to the Lift-Assist Arm

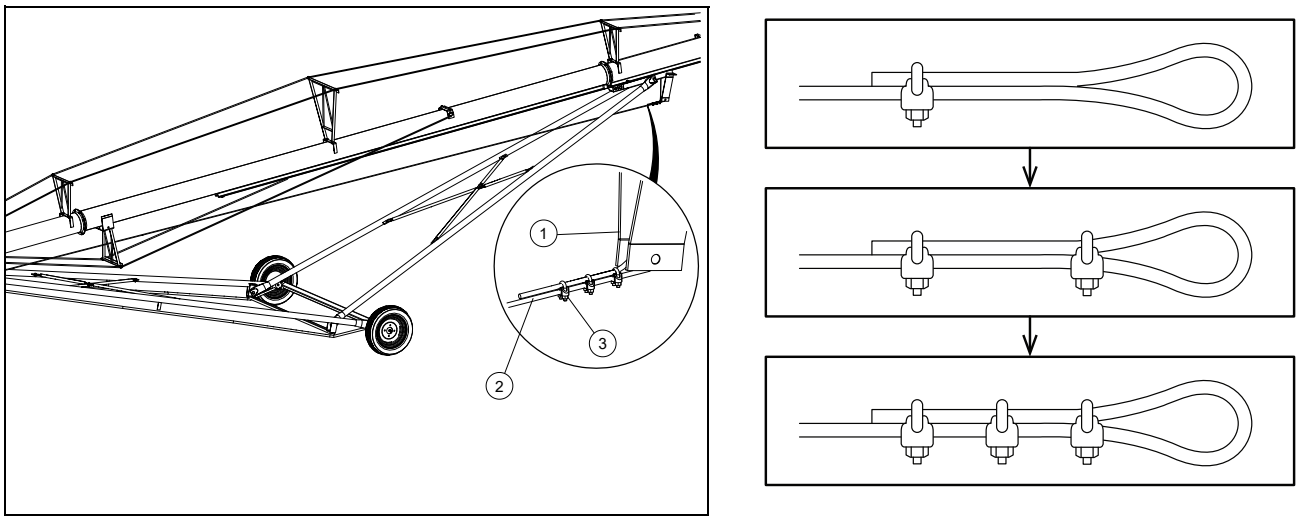

1	lift-assist arm	3	cable clamp, 5/16" (53/63/73 models)
2	lift cable		cable clamp, 3/8" (83 models)

4.17. Connect Hydraulic Hoses (53/63/73 Models)

Note

Determine the right or left side of the auger by standing at the intake end facing the top discharge end.

Elbow fittings are factory installed. Use thread sealant on fitting and hose threads (not supplied).

WARNING Wear on hose can cause auger to drop suddenly, causing serious injury or death and damage to the equipment.

1. Connect the pressure hose to the hydraulic cylinder cap-end right-angle fitting.
   - Run the pressure hose under the tube and to the boot, securing the hose at brackets welded to side of the auger tube and boot. Bend the tops of these brackets over slightly to hold the hose in place.

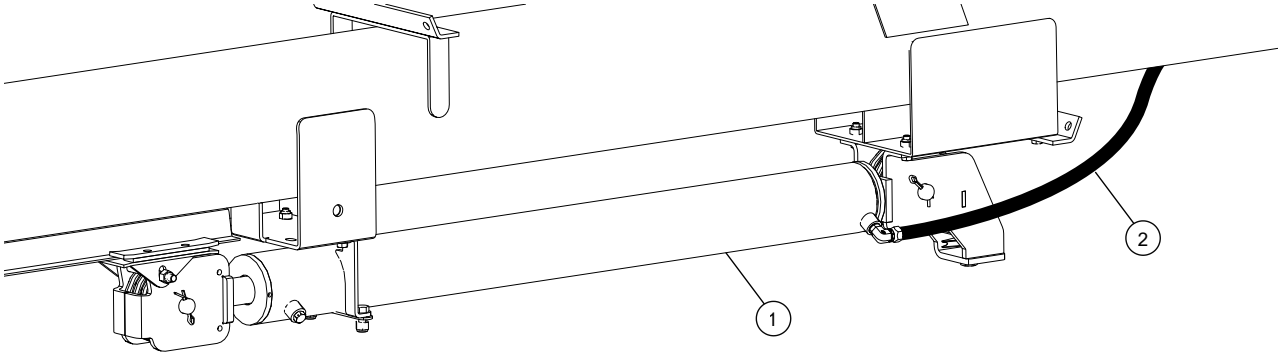

1	hydraulic cylinder	2	pressure hose

2. At the boot, install the pressure hose to the bulkhead coupler fitting.
3. Install the hydraulic hose assembly with the ball valve to the bulkhead coupler fitting.

Important

Protect hose ends from dirt.

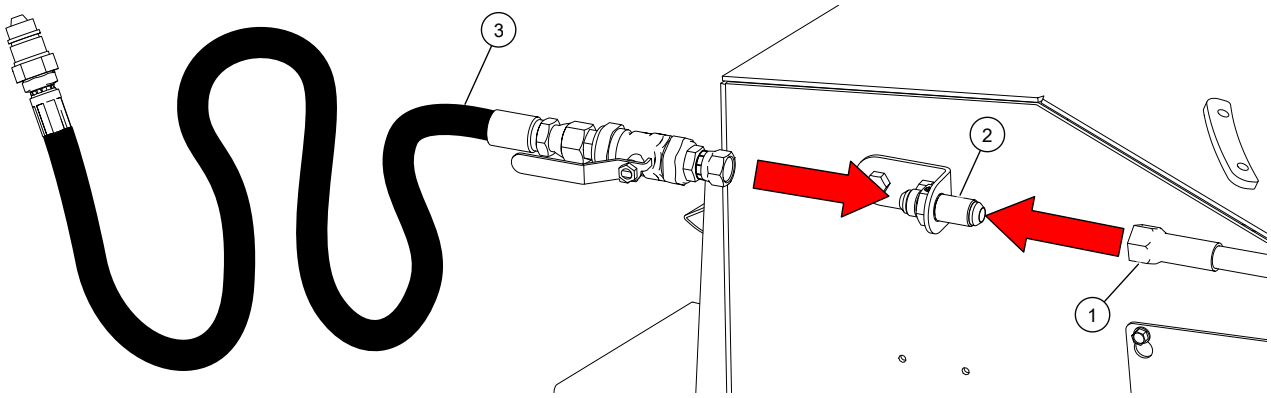

1	pressure hose	3	hydraulic hose assembly with ball valve
2	bulkhead coupler fitting		

4. Recheck that the bolts on undercarriage, lift cylinders, and cable clamps are tight.
5. Remove the auger tube support.

4.18. Connect Hydraulic Hoses (83 Model)

Note

Determine the right or left side of the auger by standing at the intake end facing the top discharge end.

Elbow fittings are factory installed. Use thread sealant on fitting and hose threads (not supplied).

WARNING Wear on hose can cause auger to drop suddenly, causing serious injury or death and damage to the equipment.

1. Connect the pressure hose to the hydraulic cylinder cap-end right-angle fitting.
   - Run the pressure hose under the tube and to the boot, securing the hose at brackets welded to the side of the auger tube and boot. Bend the tops of these brackets over slightly to hold the hose in place.
   - Run the return hose through the back-arm bracket, under the tube, and to the boot, securing the hose at brackets welded to the side of the auger tube and boot. Bend the tops of these brackets over slightly to hold the hose in place.

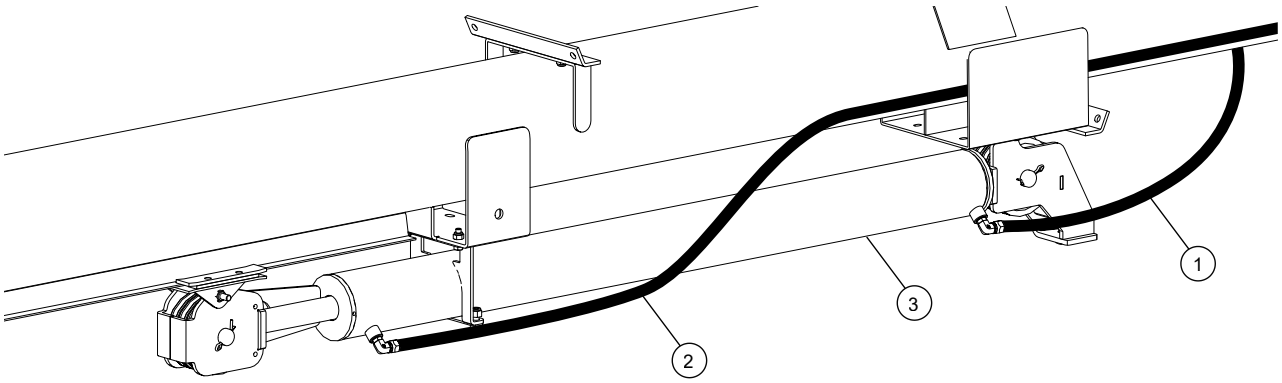

1	pressure hose, 3/8" x 182"	3	hydraulic cylinder
2	return hose, 3/8" x 246"		

2. At the boot, install the hydraulic hoses to the external check valve.
3. Install the hydraulic hose assemblies to the external check valve.

   Important

   Protect hose ends from dirt.

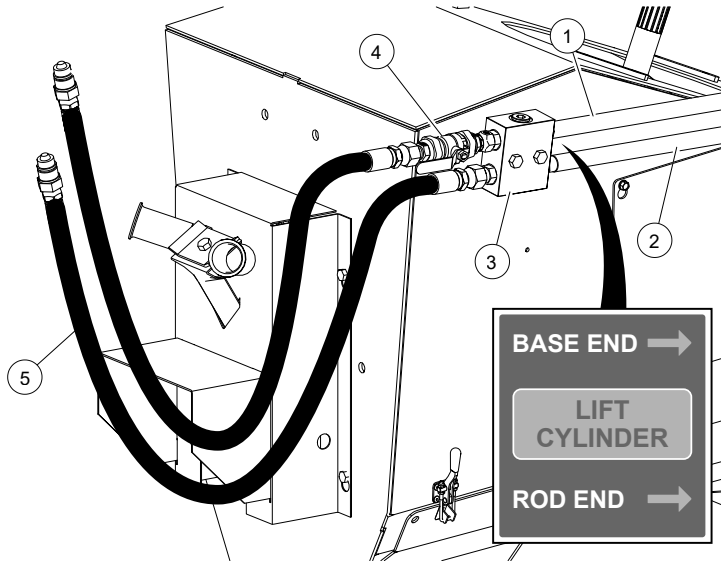

1	pressure hose, 3/8" x 182"
2	return hose, 3/8" x 246"
3	external check valve
4	hydraulic hose assembly with ball valve
5	hydraulic hose assembly with coupler

4. Recheck that the bolts on undercarriage, lift cylinders, and cable clamps are tight.
5. Remove the auger tube support.

4.19. Connect the PTO Driveline

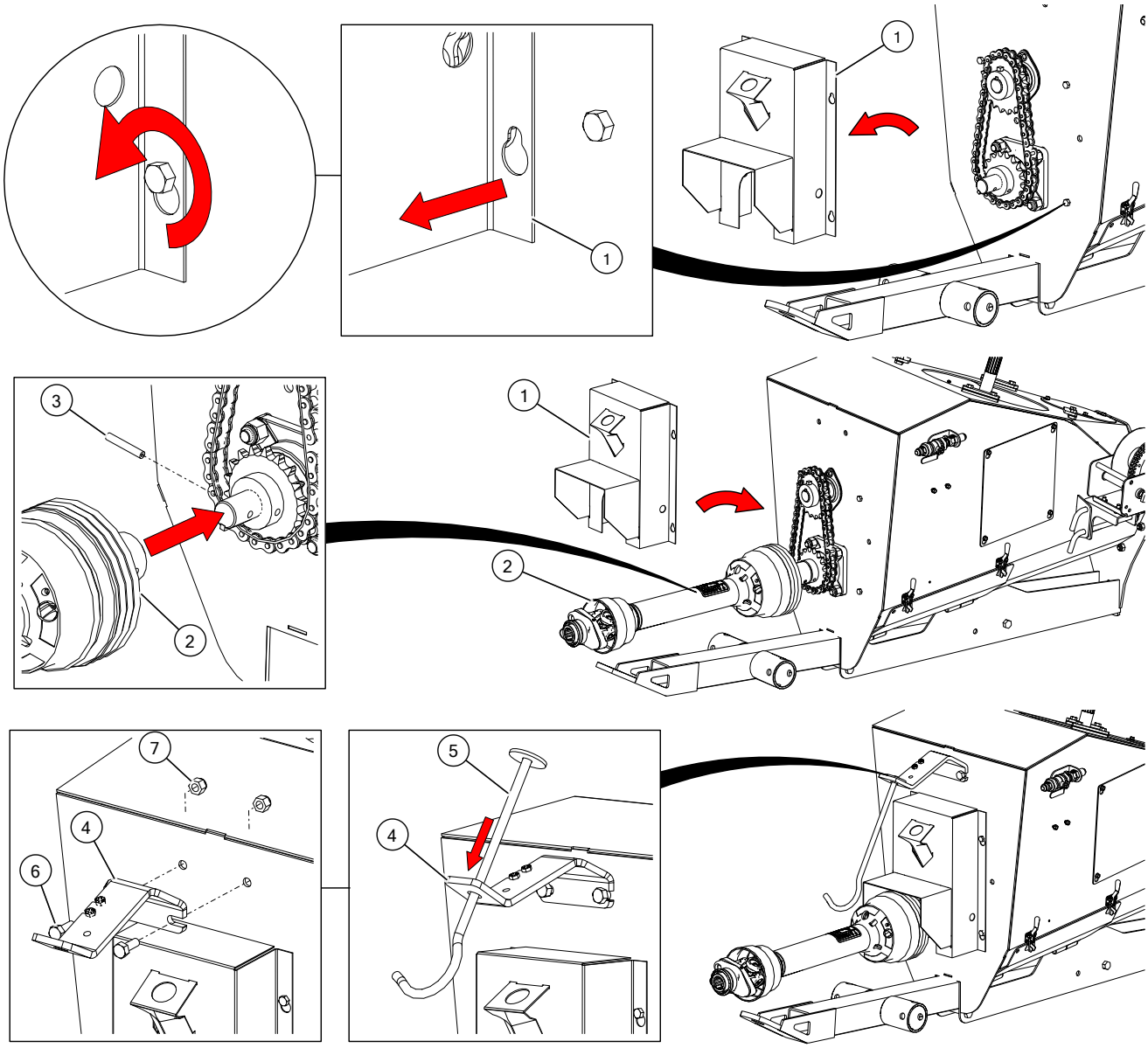

Assembly Notes:

- Clean paint or dirt off of PTO driveline and flighting shaft ends before assembly.
- Make sure that the square key is in place on the flighting shaft.
- Tighten the set screw on the PTO shaft.

1	sprocket cover	5	PTO transport saddle
2	PTO	6	bolt, 1/2" x 1-1/4"
3	roll pin, 5/16"	7	lock nut, 1/2"
4	transport bracket		

Figure 19. Installing the Double Hose Holder (83 Model)

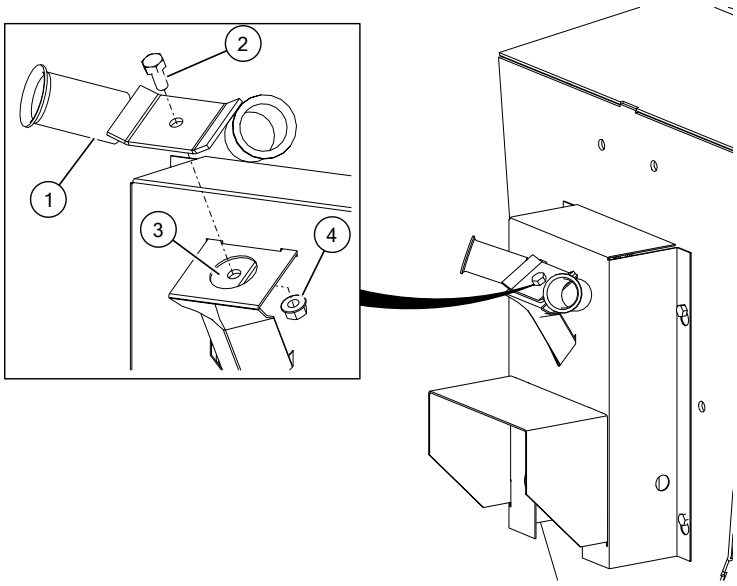

Assembly Note:

- The double hose holder is only installed on the 83 model.

1	double hose holder
2	bolt, 3/8" x 1"
3	square washer
4	lock nut, 3/8"

4.20. Install Low Profile Intake Hopper

WARNING Components are heavy and create a crushing hazard if improperly handled. Be sure to use proper hoisting equipment and procedures, and ensure lifting apparatus is secure. Lockout the lifting apparatus before working around or under the raised components. Failure to do so may cause serious personal injury.

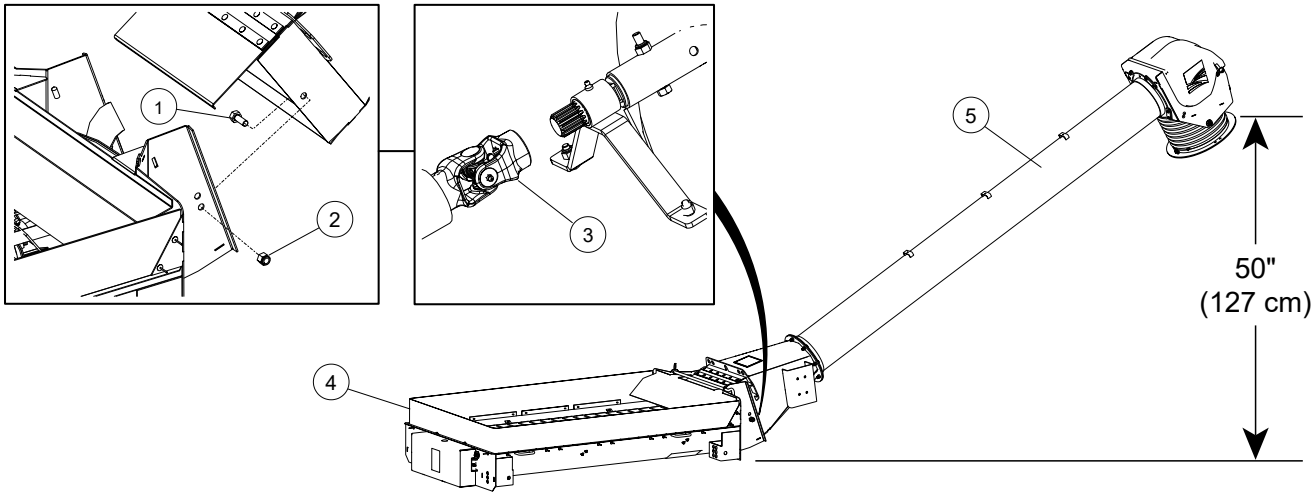

Assembly Notes:

- Clean dirt and paint from inside the u-joint and flighting shaft end, then grease the shaft end.
- Raise and support the hopper tube spout head on a stand about 50" (127 cm) high.
- The swing tube gearbox is sent from the factory filled half way with EP90 gear oil. Before further assembly, check oil level to make certain the gearbox is half full. Add oil if necessary. Do not use grease.
- Open the transition door for easier access.
- DO NOT overtighten; tighten to a slightly loose fit only as these bolts act as pivot points.

1	bolt, 5/8" x 1-1/2"	4	hopper assembly
2	lock nut, 5/8"	5	swing tube assembly
3	U-joint		

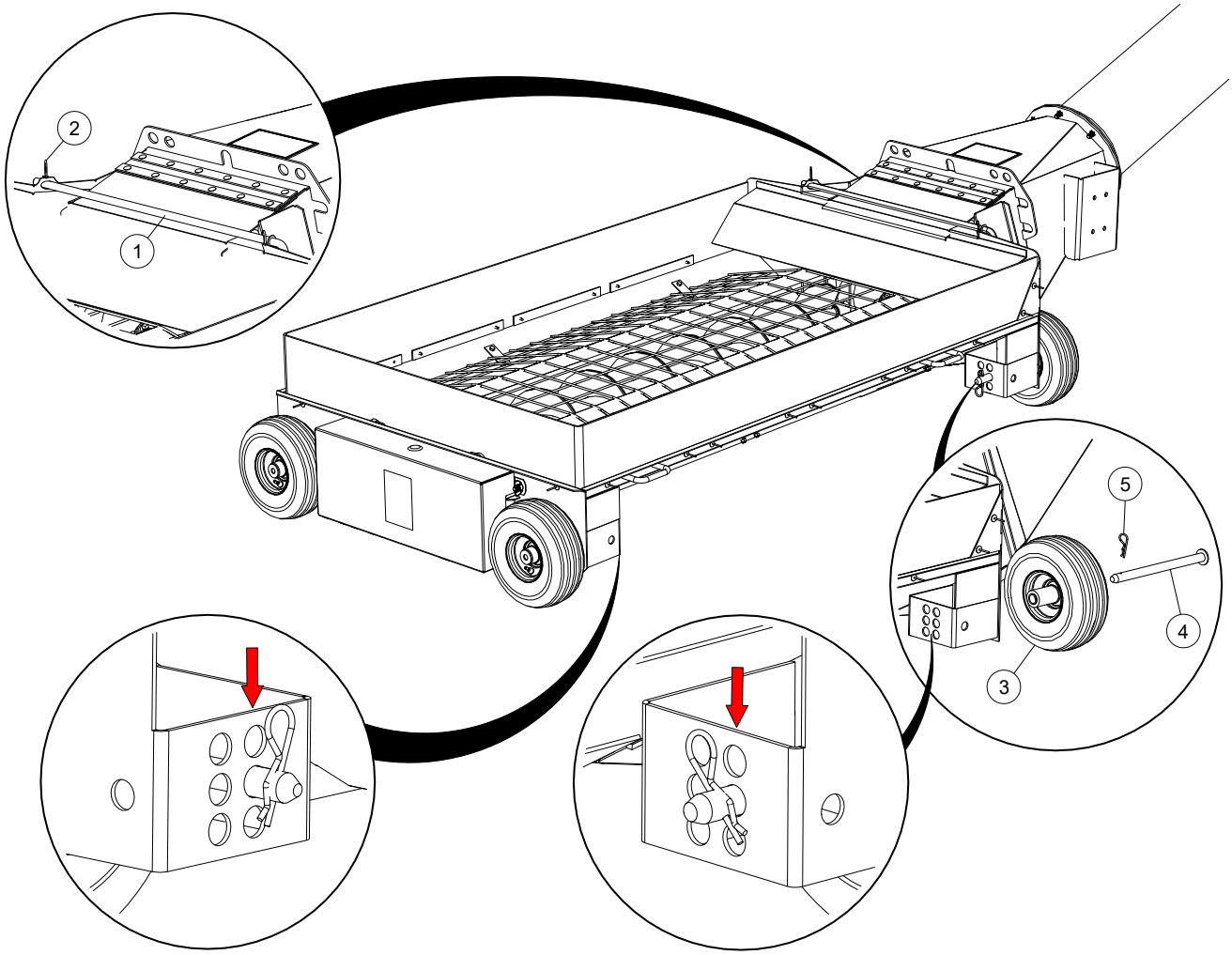

Assembly Notes:

- Tighten set screws on u-joints, then close and secure the service door.
- Attach the four solid wheels to the four hopper corners with the axle pins and hairpins. There are 3 height settings for the hopper wheels that can be used according to preference.
- The front wheels use the outward set of holes.
- The back wheels use the inside set of holes.

1	inspection hatch bar	4	wheel pin
2	lynch pin	5	hairpin
3	wheel		

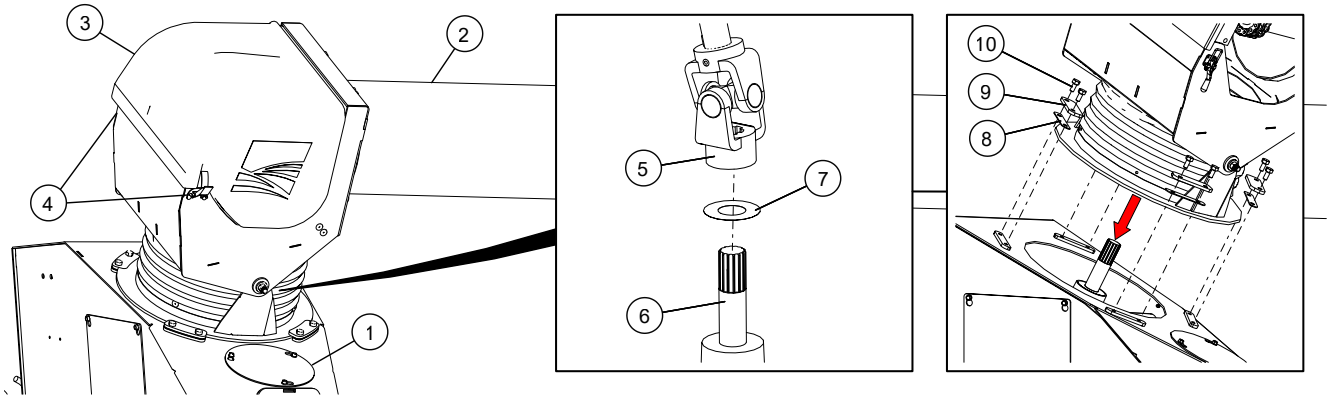

Assembly Notes:

- Open the latches and rotate the spout lid.
- Clean the u-joint spline and splined shaft on the lower gearbox, then apply a light film of grease on the splined shaft.
- Center the spout head above the gearbox, then guide the u-joint onto the gearbox shaft.
- Lubricate the u-joint, then close and secure the spout head lid.

1	boot	6	lower gearbox shaft
2	swing tube	7	rim washer
3	spout head lid	8	spout head spacer
4	latch	9	spout head retainer
5	upper gearbox U-joint	10	bolt, 3/8" x 3/4"

4.21. Install the Hopper Lift Extension (83 Model)

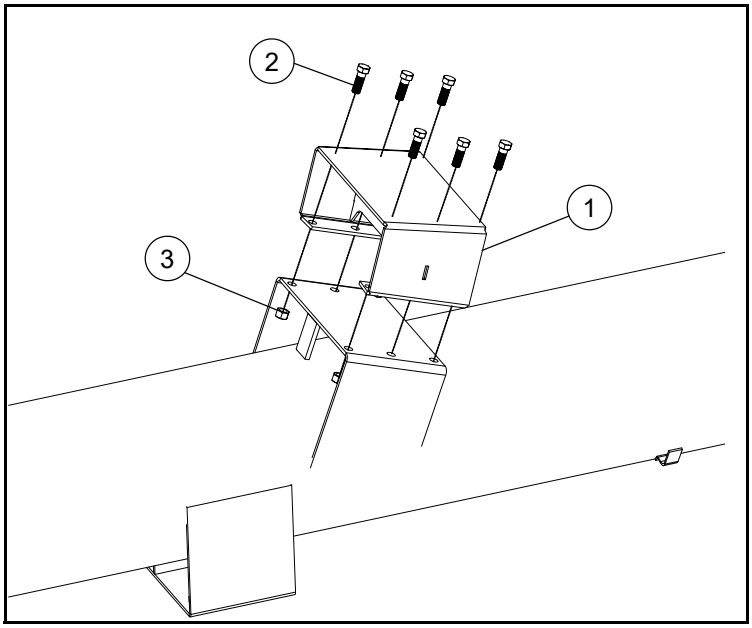

1	lift extension	3	lock nut, 7/16"
2	bolt, 7/16" x 1-1/4"		

4.22. Install the Hopper Lift Arm and Winch

Hopper Lift Arm Assembly

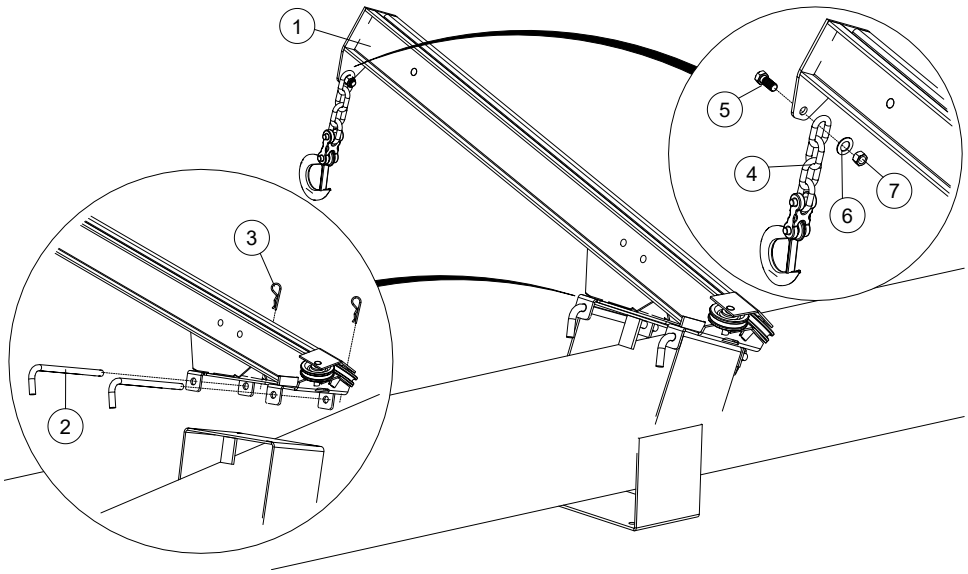

Assembly Notes:

- Determine which side of the auger the hopper will be operating on.
- Position the lift arm assembly on top of the auger tube with the arm overhanging the side that the hopper will be operating on.
- Install the transport hook assembly to the lift arm.

1	hopper lift arm	5	bolt, 7/16" x 1-1/4"
2	mount pin	6	flat washer, 7/16"
3	hairpin	7	lock nut, 7/16"
4	transport hook assembly		

Manual Winch Installation

Right Side

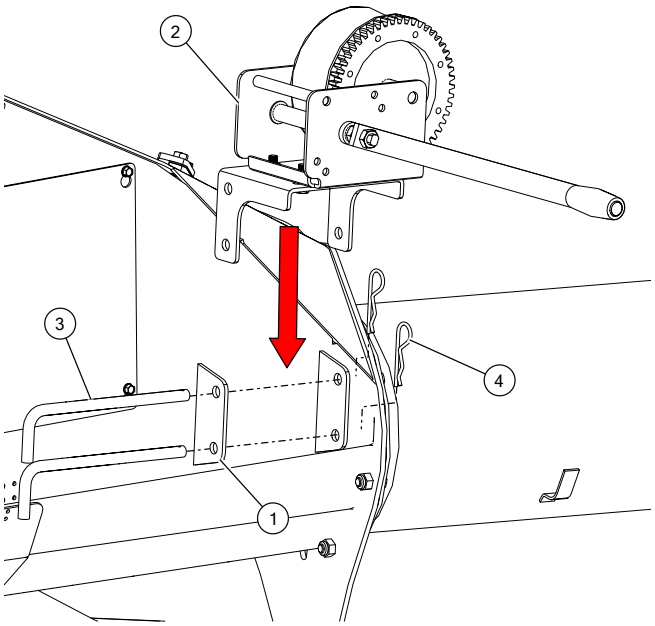

Left Side

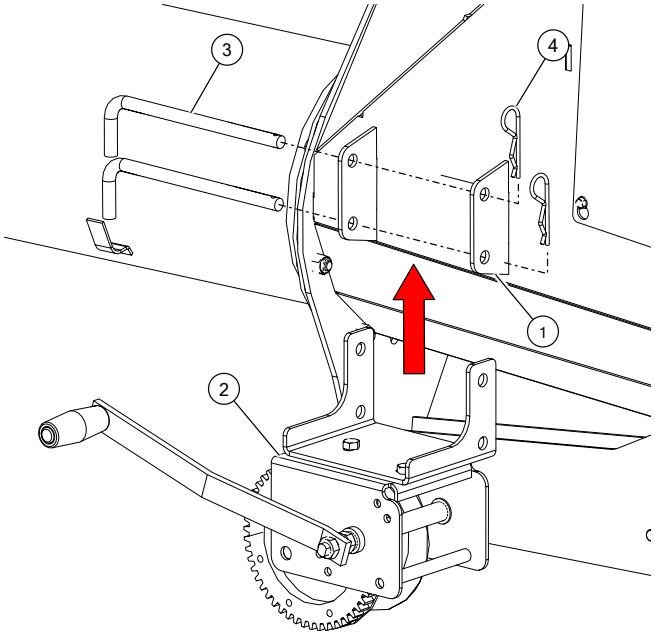

Assembly Note:			
• Position the winch assembly on the opposite side that the hopper will be operating on.			
1	boot winch bracket	3	pin
2	winch assembly	4	hairpin

Winch Cable Installation

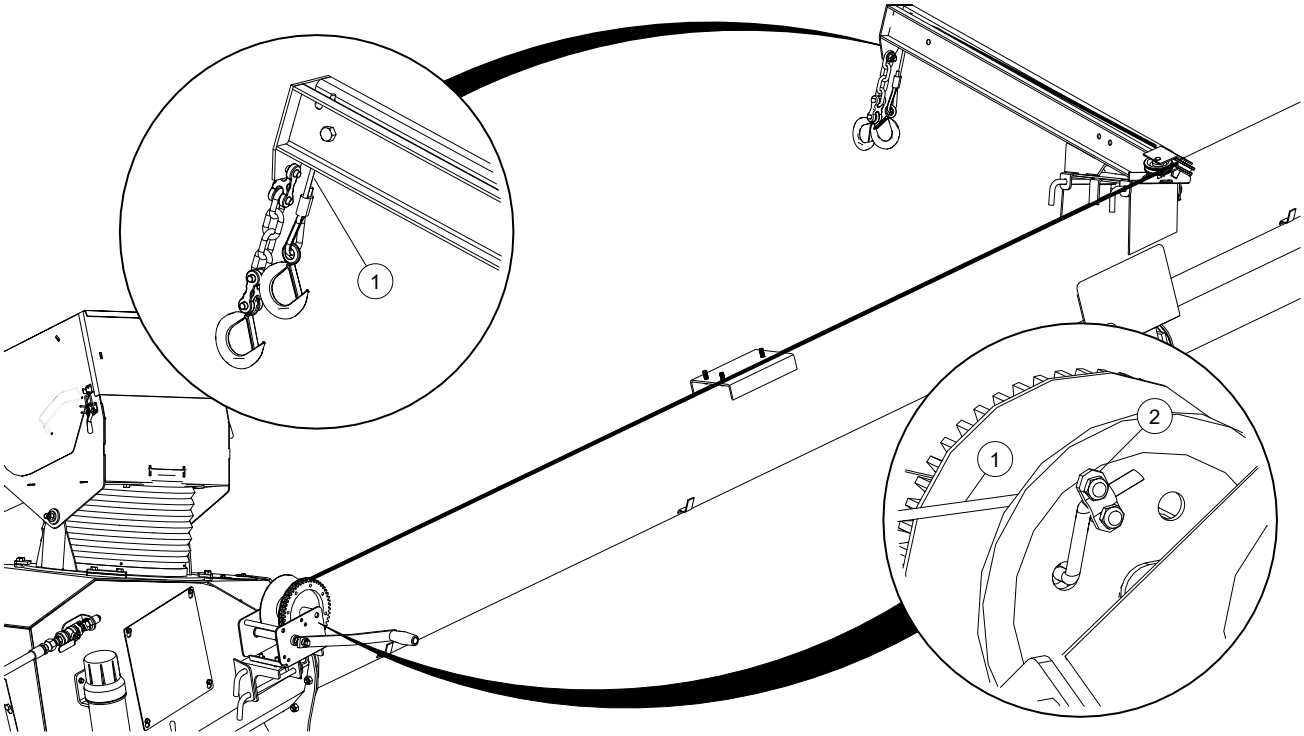

Assembly Notes:

- Thread the cable through the hopper lift arm and pull the cable to the winch.
- Wrap the cable over and around the winch spool at least three times, then insert the cable end through the hole provided in the side of the spool and secure the end with the provided cable clamp.

1	winch cable	2	cable clamp

4.23. Hopper Transport Position

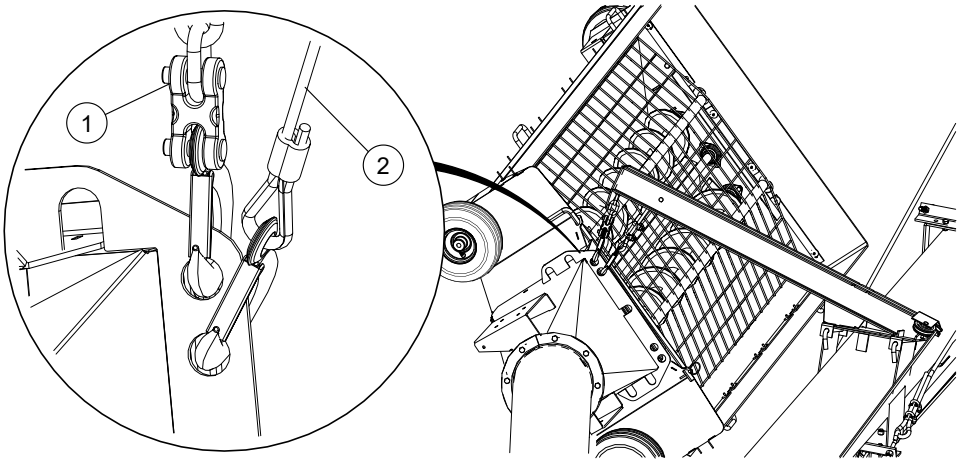

Assembly Note:			
• Feed side of hopper must face the main auger when in transport.			
1	safety chain	2	winch cable

4.24. Install the Hitch Jack

The jack is attached to the auger with a pin at the pivot point. To install:

1. Elevate the auger boot (intake end) approximately 2' (61 cm) with a front-end loader and sling, and install the jack in a vertical position. Secure with supplied pin.
2. Place a board beneath the jack before setting it on the ground, then lower the auger until the jack is seated. Remove front-end loader from auger.

   Note

   Jack can be rotated 90° for transport or operation.

WARNING Jack is designed for raising or lowering auger hitch only.
Do not get on or beneath auger while supported by or while jack is being operated.

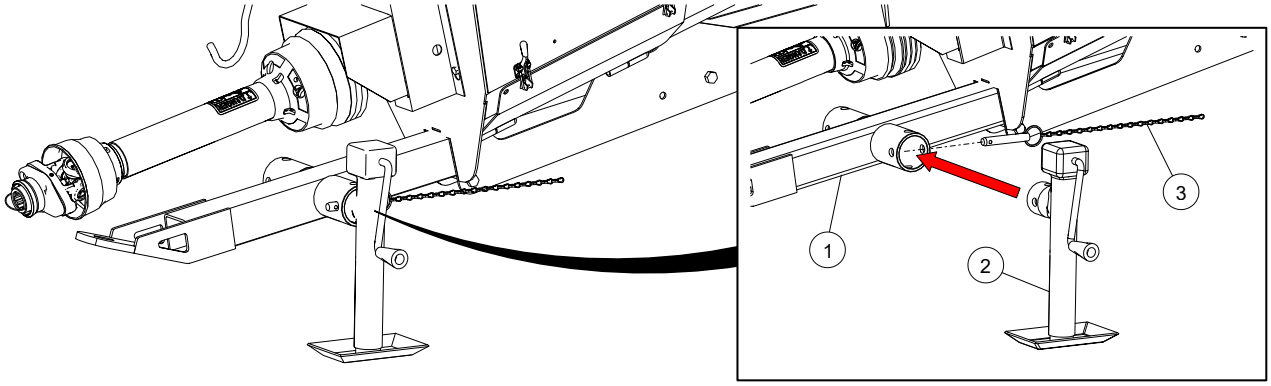

1	tow bar	3	pin
2	jack		

4.25. Install the Plastic Manual Container

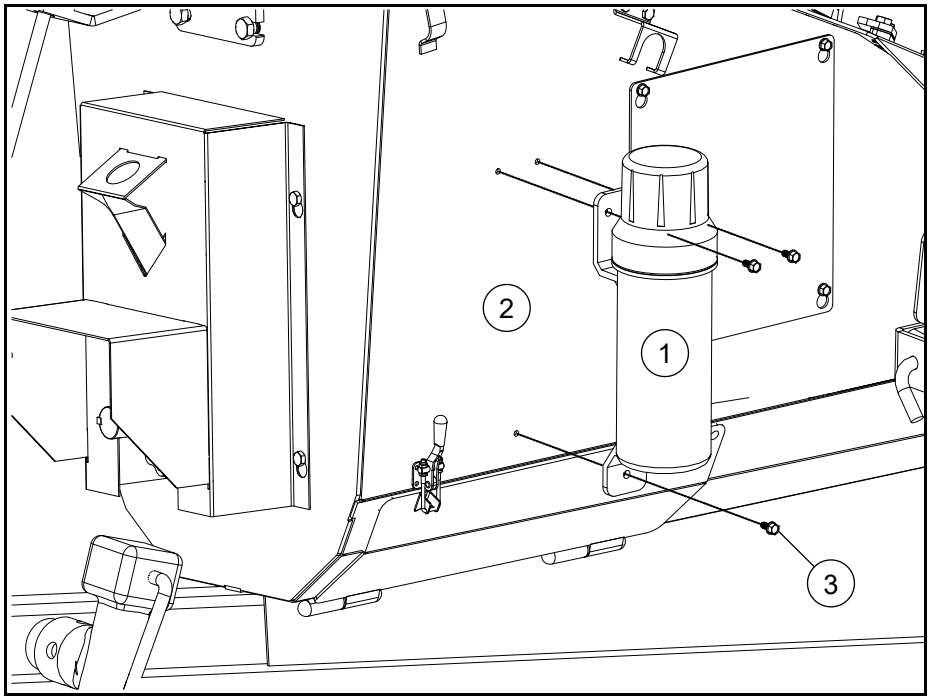

Assembly Note:

- Before beginning installation, ensure that all winch/auger lift controls are locked in place and shut down and/or lock out auger.

1	plastic manual holder	3	self-tapping screw, #14 x 5/8"
2	boot		

5. Specifications

Table 2. MKX²/HX² 10 Specifications

Specification		10-53	10-63	10-73	10-83
Tube Size		10" (25.4 cm)			
CAPACITIES					
Unloading Rate		6600 Bu/Hr			
TRANSPORT DIMENSIONS					
Length		55'10" (17 m)	65'10" (20 m)	75'4" (23 m)	86'4" (26.3 m)
Width		106" (2.7 m)	112" (2.8 m)	118" (3 m)	112" (2.8 m)
Height		12'9" (3.9 m)	13'6" (4.1 m)	14'8" (4.5 m)	13' (4 m)
DISCHARGE CLEARANCE DIMENSIONS					
Min		10'8" (3.3 m)	11'7" (3.5 m)	12'10" (3.9 m)	11'3" (3.4 m)
Max		36'7" (11.2 m)	41'6" (12.7 m)	48'4" (14.7 m)	55' (16.8 m)
REACH TO WHEELS					
Min		22'5" (6.8 m)	26'9" (8.2 m)	29'7" (9 m)	33'3" (10.1 m)
Max		27'1" (8.3 m)	32'3" (9.8 m)	36'10" (11.2 m)	43'9" (13.3 m)
TIRES					
Type		15"			16"
Inflation Pressure		See Manufacturer Recommended Pressure on Tire Sidewall			
Hubs		4 Bolt Automotive Type			Heavy Duty 6 Bolt Automotive Type
WEIGHT					
Total Weight		2788 lb (1265 kg)	2912 lb (1321 kg)	3170 lb (1438 kg)	3856 lb (1749 kg)
POWER RECOMMENDATIONS					
PTO Drive		45–50 HP	50–60 HP	55–65 HP	65–75 HP
PART SPECIFICATIONS					
PTO Speed		540 RPM			
PTO Shaft		14E			35E
Shear Bolt		5/16" x 1"			
PTO Maximum Operating Angle		15°			
Hitch Jack		2000 lb Side Winder			
Upper/Lower Gearbox Oil Capacity		0.45 US quarts (0.43 L)			
Replacement Hose & Hose Ends	Min Strength (Working Pressure)	2500 psi (17200 kPa)			
Pressure Required to Raise Auger		1000 psi	1200 psi	1400 psi	1800 psi
Hitch Pin (Minimum)		3/4" x 5"			

6. Appendix

6.1. Bolt Torque

Table 3 gives the correct torque values for various hardware. Tighten all bolts to the torque specified, unless otherwise noted. Check tightness periodically, using Table 3 as a guide. Replace the hardware with the same strength bolt, contact AGI if you are unsure.

Table 3. Recommended Bolt Torque[1]

Size	Dry or Lubricated	Threads per inch (Course/ Fine)	Area of Bolt (sq in.)		Recommended Torque (ft-lb)							
					Grade 2		Grade 5		Grade 8		8.8 S/S	
			Coarse	Fine	Coarse	Fine	Coarse	Fine	Coarse	Fine	Coarse	Fine
1/4"	Dry	20/28	0.0318	0.0364	5.5	6.3	8	10	12	14	6.3	7.8
	Lubricated				6.3	4.7	6.3	7.2	9	10	-	-
5/16"	Dry	18/24	0.0524	0.058	11	12	17	19	24	27	11	11.8
	Lubricated				8	9	13	14	18	20	-	-
3/8"	Dry	16/24	0.0775	0.0878	20	23	30	35	45	50	20	22
	Lubricated				15	17	23	25	35	35	-	-
7/16"	Dry	14/20	0.1063	0.1187	32	36	50	55	70	80	31	33
	Lubricated				24	27	35	40	50	80	-	-
1/2"	Dry	13/20	0.1419	0.1599	50	55	75	85	110	120	43	45
	Lubricated				35	40	55	65	80	90	-	-
9/16"	Dry	12/18	0.182	0.203	70	80	110	120	150	170	57	63
	Lubricated				55	60	80	90	110	130	-	-
5/8"	Dry	11/18	0.226	0.256	100	110	150	170	210	240	93	104
	Lubricated				75	85	110	130	160	180	-	-
3/4"	Dry	10/16	0.334	0.373	175	200	260	300	380	420	128	124
	Lubricated				130	140	200	220	280	310	-	-
7/8"	Dry	9/14	0.462	0.508	170	180	430	470	600	670	194	193
	Lubricated				125	140	320	350	180	180	-	-
1"	Dry	8/14	0.606	0.679	250	280	640	720	910	1020	287	289
	Lubricated				190	210	480	540	680	760	-	-
1-1/8"	Dry	7/12	0.763	0.856	350	400	790	890	1290	1440	288	290
	Lubricated				270	300	590	670	970	1080	-	-
1-1/4"	Dry	7/12	0.989	1.073	500	550	1120	1240	1820	2010	289	291
	Lubricated				380	420	840	930	1360	1510	-	-
1-1/2"	Dry	6/12	1.405	1.581	870	960	1950	2200	3160	3560	-	-
	Lubricated				650	730	1460	1640	2370	2670	-	-

1. Torque value for bolts and cap screws are identified by their head markings. Established at 75% of yield strength of bolt given the cross-sectional area.

Note

Torque figures in table are valid for non-greased or non-oiled threads and head unless otherwise specified. Therefore, do not grease or oil bolts or cap screws unless otherwise specified in this manual. When using locking elements, increase torque values by 5%.

6.2. Lift Cylinder Hydraulics

This auger is elevated with a 4" bore (83 model has a 4-1/2" bore), single acting hydraulic cylinder and cable. The following table lists the psi required to raise specific auger sizes (as determined by AGI testing).

These tests used a hydraulic pressure gauge (4000 psi maximum rating) and are solely intended to be used as a guide. The psi requirements for specific augers may vary slightly. Should your auger require a significantly higher psi to raise, contact either your dealer or AGI.

Table 4. Lift Cylinder Hydraulics

Auger Model	Pressure Required to Raise Auger	Fluid Volume Required to Raise Auger
53	1000 psi (6895 kPa)	6.2 L
63	1200 psi (8274 kPa)	7.5 L
73	1400 psi (9653 kPa)	9.0 L
83	1800 psi (12411 kPa)	9.0 L

6.3. Charge the Lift System

83 Model Only

Important

The hydraulic cylinders are shipped without oil and must be charged with oil before auger is put into operation.

The cylinder will require about 9 L (2.5 US gallons). Check your tractor’s operation manual for correct oil type and specifications.

Before charging cylinders, ensure that:

- Tractor is correctly hooked up.
- Hydraulic hoses are connected.
- Shut-off valve is open.
- Auger is parked on level ground.

1. Start with the tractor’s hydraulic oil level in a normal operating range.
2. Add about 4 L (1 US gallon) to the tractor’s hydraulic oil reservoir.
3. Start tractor, then raise auger until the lift-assist is fully extended and track shoe has moved about one foot from track stop.

   Note

   Do not raise auger in high winds.

4. With tractor still running, lower auger to full down position.
5. Repeat steps 2, 3, and 4 until about 9 L (2.5 US gallons) have been added and tractor hydraulic oil level in the reservoir remains within the operating range.

7. AGI Limited Warranty

This warranty relates to AGI Augers (the "Product") sold by AGI, (referred to herein as the "Seller") and applies only to the first user of the Product (meaning a purchaser directly from the Seller or from an authorized dealer or distributor of the Product, referred to herein as the "Buyer").

This warranty shall only be effective if properly registered with the Seller in accordance with information provided to the Buyer at the time of sale.

1. The Seller warrants to the Buyer that the Product is free from defects in material and workmanship **under normal and reasonable use**.
2. This warranty applies only to defects in materials and workmanship and not to damage incurred in shipping or handling, through normal wear and tear, or damage due to causes beyond the control of the Seller such as lightning, fire, flood, wind, earthquake, excessive voltage, mechanical shock, water damage, or damage arising out of abuse, alteration, improper assembly, improper installation, improper maintenance or improper repair of the Product.
3. **The warranty period for the Product shall be two years from delivery of the Product to the Buyer where the Product is used in a normal farm operation. First year of warranty coverage of parts and labour, second year warranty coverage of parts only. Warranty period for the Product shall be 90 days from delivery of the Product to the Buyer where the Product is used in a commercial operation.**In the event that any part incorporated into the Product is manufactured and sold to the Seller by a third party vendor, such part is only warranted to the extent of the warranty given by that third party.
4. The obligations set forth in this warranty are conditional upon the Buyer promptly notifying the Seller of any defect and completing reasonably required documentation and, if required, promptly making the Product available for correction. The Seller shall be given reasonable opportunity to investigate all claims and no Product shall be returned to the Seller or part disposed of until after inspection and approval by the Seller and receipt by the Buyer of written shipping instructions, with transportation charges prepaid.
5. Upon return of the Product, or such part of the Product that requires correction, the Seller shall, at the Seller's option, either repair or replace the Product or such part. The Seller shall replace or attempt to repair and return the Product or such part within a reasonable period of time from receipt of an approved warranty claim from the Buyer. If the Seller is unable to repair or replace the Product, the Buyer shall be entitled to a credit note in the amount of the purchase price for the Product.
6. The total liability of the Seller on any claim, whether in contract, tort or otherwise, arising out of, connected with, or resulting from the manufacture, sale, delivery, repair, replacement or use of the Product or any part thereof **shall not exceed the price paid for the Product** and the Seller shall not be liable for any special indirect, incidental or consequential damages caused by reason of the installation, modification, use, repair, maintenance or mechanical failure of the Product. **Consequential or special damages as used herein include, but are not limited to, lost or damaged products or goods, costs of transportation, lost sales, lost orders, lost income, increased overhead, labor and incidental costs and operational inefficiencies.**
7. **Notwithstanding anything contained herein to the contrary, the foregoing is the Buyer's sole and exclusive remedy for breach of warranty by the Seller in respect of the Product. The Seller, for itself, its agents, contractors, employees and for any parent or subsidiary of the Seller, expressly disclaims all warranties, either express or implied, written or oral, including implied warranties of merchantability or fitness for a particular purpose and undertakes no obligation with respect to the conformity of the Product except as set out in the purchase agreement, if any, or marketing materials.**
8. The foregoing warranty is the entire warranty of the Seller to the Buyer and the Buyer shall not be entitled to rely upon any representation or warranty contained in any marketing material of the Seller in respect of the Product. The Seller neither assumes, nor authorizes any other person purporting to act on its behalf to modify or to change this warranty, nor to assume for it any other warranty or liability concerning the Product.

WARRANTY VOID IF NOT REGISTERED

AGI is a leading provider of equipment solutions for agriculture bulk commodities including seed, fertilizer, grain, and feed systems with a growing platform in providing equipment and solutions for food processing facilities. AGI has manufacturing facilities in Canada, the United States, the United Kingdom, Brazil, South Africa, India and Italy and distributes its products globally.

P.O. Box 39, Rosenort, Manitoba, R0G 1W0 Canada
P 866.467.7207 (Canada & USA) or 204.746.2396 | **F** 866.768.4852 | **E** sales@grainaugers.com

AGGROWTH.COM aggrowthintl

If you have any comments or questions on this manual, or find an error, email us at comments@aggrowth.com.
Please include the part number listed on the cover page in your message.